Allied Vision

SHR 10GigE

shr411CXGE-T



□□

□□	shr411CXGE-T
□□□□	F004241
□□□□	SHR 10GigE
□□	Available

□□□

□□□□□	Area scan
□□	Color
□□	Visible
□□□□	400 nm to 1000 nm
□□□	14,192 × 10,640 (151.00 MP)
□□□□□	Sony IMX411
□□□□□ (□□)	cmos
□□□□	Rolling shutter (RS)
□□□□□	53.36 × 40.01 mm (66.69 mm, Type 4.2)
□□□□	3.76 µm × 3.76 µm

□□□□

□□□□□	8-bit, 10-bit, 12-bit, 16-bit
RGB □□□□	bayer8, bayer10, bayer12, bayer16

□□□□

□□□□	78 dB
□□□	46.9 dB

□□□□□

□□□□□	6.2 fps
□□□□	60 µs to 60 s
□□	0.0 dB to 36.0 dB

I/O □□□

□□□□	0 x LVDS input, 0 x LVDS output, 0 x TTL input, 0 x TTL output, 2 x 24V input, 4 x Open drain output,
□□□□□□	1 x RS232 input, 1 x RS232 output, 0 x RS422 input, 0 x RS422 output,
□□□□	1 x Optical isolated input, 0 x Optical isolated input,
I/O □□□	12-pin Hirose HR10A-10P-12S
□□□□	21 to 25VDC, Power over Ethernet (POE+)
□□	External: 30 W (typical)

□□□□

□□□□	-10 °C to 70 °C (□□)

□□□□

□□□□ (□ x □ x □ mm)	107 × 80 × 80
□□□/□□□□	IR-Cut - 680nm
□□□□	IP30
□□□□	M72x0.75
□□	810 g

□□

□□□□	10gige
□□□□□	(RJ-45)
□□□□	GigE Vision 2.0

FW □□ – □□□□

□□□□	manual, auto
□□□□	auto, manual
□□□□□	auto, manual
□□□□□□	roi, lut, mirror-image, dpc, shading-correction, ffc

FW □□ – □□□□

□□□□/□□	internal, software, external
□□□□□□	User Sets, POE, PWM(4), Sequencer,

□□□□

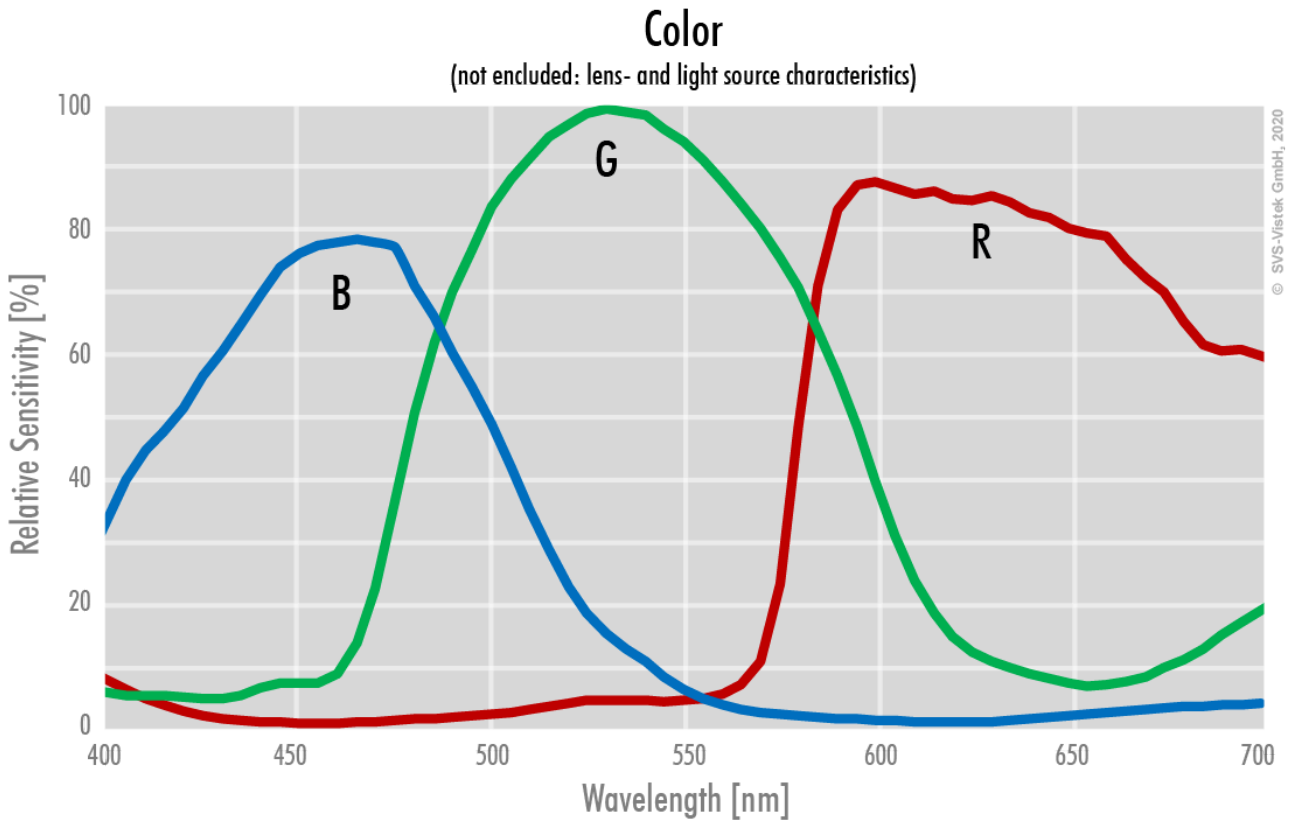
Color
(not encluded: lens- and light source characteristics)
Relative Sensitivity [%]
100
80
60
40
20
0
400
450
500
550
600
650
700
Wavelength [nm]
B
G
R
© SVS-Vistek GmbH, 2020

□□□□

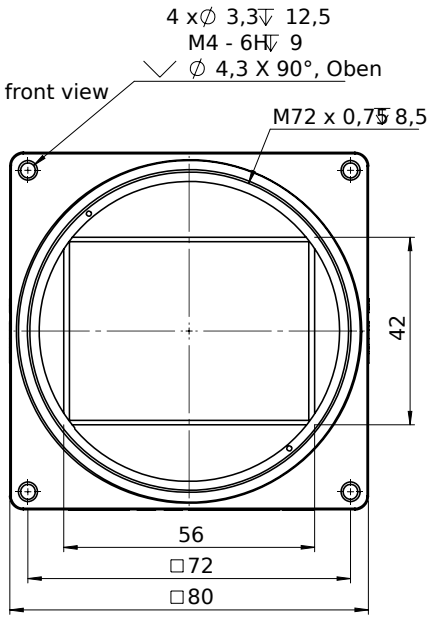
4 x∅ 3,3↧ 12,5
M4 - 6H↧ 9
⌵ ∅ 4,3 X 90°, Oben
front view
M72 x 0,75↧ 8,5
42
56
□72
□80

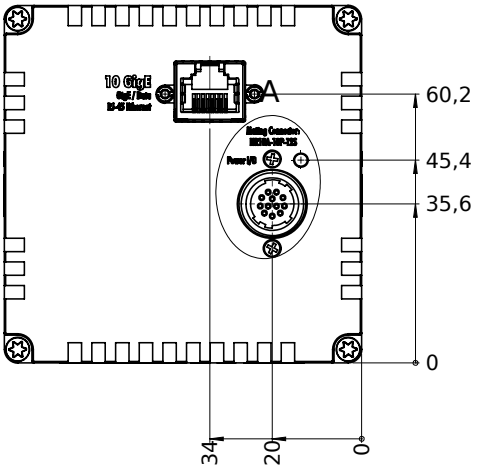
10 GigE
A
60,2
45,4
35,6
0
34
20
0

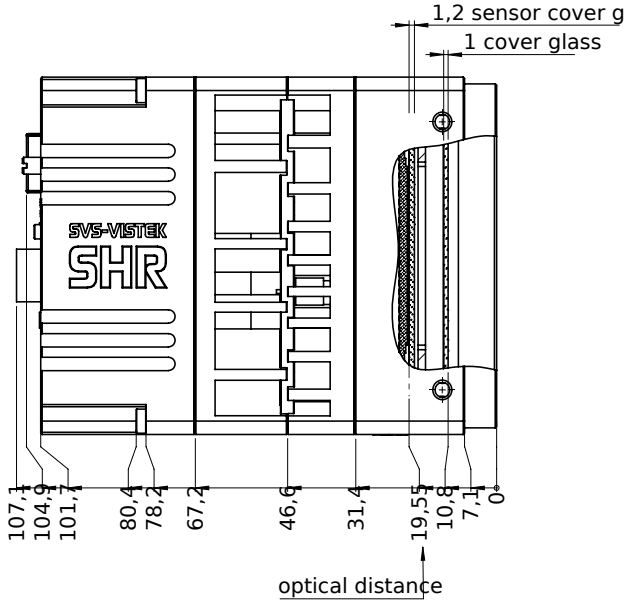
1,2 sensor cover g
1 cover glass
SVS-VISTEK
SHR
107,1
104,9
101,7
80,4
78,2
67,2
46,6
31,4
19,55
10,8
7,1
0
optical distance

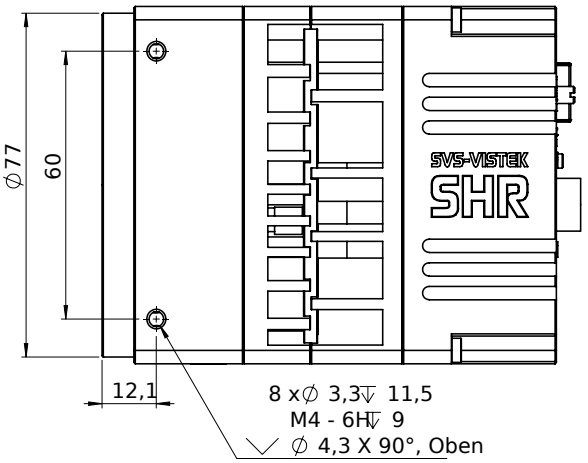
∅77
60
SVS-VISTEK
SHR
12,1
8 x∅ 3,3↧ 11,5
M4 - 6H↧ 9
⌵ ∅ 4,3 X 90°, Oben

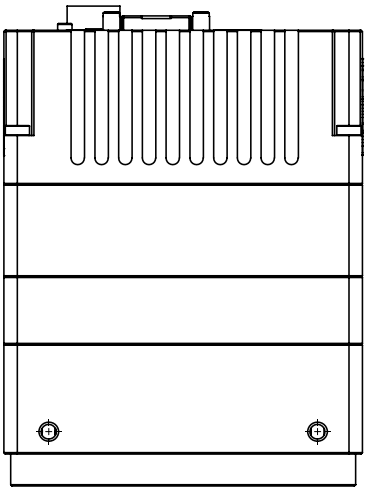

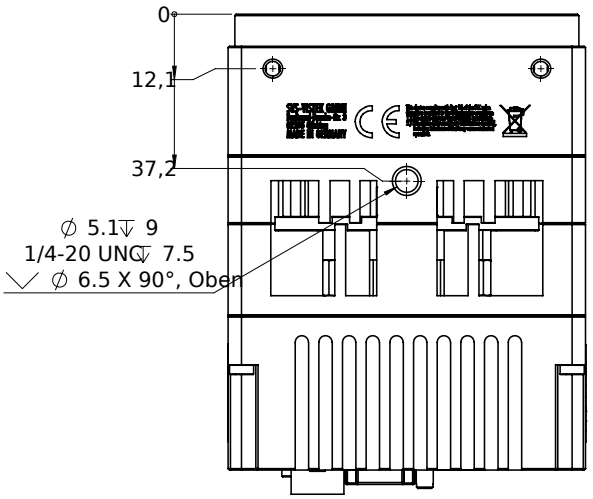

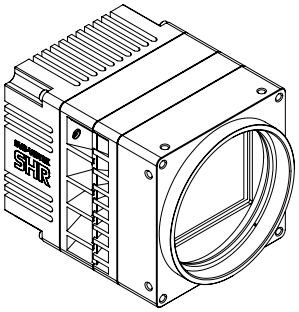

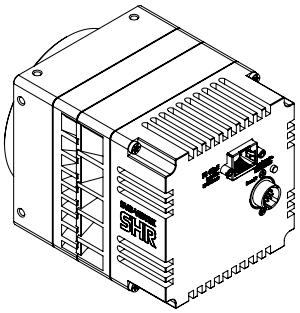

I/O □□□□

Hirose 12 Pin

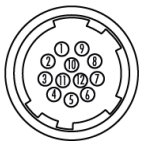

1	VIN –	(GND)	7	OUT 1	(open drain)
2	VIN +	(10 V to 25 V DC)	8	OUT 2	(open drain)
3	IN 4	(RXD RS232)	9	IN 3 +	(opto In +)
4	OUT 4	(TXD RS232)	10	IN 3 –	(opto In –)
5	IN 1	(0 - 24V)	11	OUT 3	(open drain)
6	IN 2	(0 - 24V)	12	OUT 0	(open drain)