Allied Vision



SHR 10GigE

shr461MXGE

□□

□□	shr461MXGE
□□□□	F004109
□□□□	SHR 10GigE
□□	Discontinued

□□□

□□□□□	Area scan
□□	Mono
□□	Visible
□□□□	400 nm to 1000 nm
□□□	11,648 × 8,742 (101.80 MP)
□□□□□	Sony IMX461
□□□□□ (□□)	cmos
□□□□	Rolling shutter (RS)
□□□□□	43.8 × 32.87 mm (54.76 mm, Type 3.4)
□□□□	3.76 µm × 3.76 µm

□□□□

□□□□□	8-bit, 12-bit, 16-bit
□□□□□□	mono8, mono12, mono16

□□□□

□□□□	81.3 dB
□□□	46.8 dB

□□□□□

□□□□□	8.7 fps
□□□□	60 µs to 60 s
□□	0.0 dB to 36.0 dB

I/O □□□

□□□□	0 x LVDS input, 0 x LVDS output, 0 x TTL input, 0 x TTL output, 2 x 24V input, 4 x Open drain output,
□□□□□□	1 x RS232 input, 1 x RS232 output, 0 x RS422 input, 0 x RS422 output,
□□□□	1 x Optical isolated input, 0 x Optical isolated input,
I/O □□□	12-pin Hirose HR10A-10P-12S
□□□□	10 to 25VDC, Power over Ethernet (POE+, in option -P)
□□	External: 17 W (typical)

□□□□

□□□□	-10 °C to 45 °C (□□□□□□)

□□□□

□□□□ (□ x □ x □ mm)	83 × 80 × 80
□□□/□□□□	Borofloat B270i - AR coating
□□□□	IP30
□□□□	M72x0.75
□□	580 g

□□

□□□□	10gige
□□□□□	(RJ-45)
□□□□	GigE Vision 2.0

FW □□ – □□□□

□□□□	manual, auto, external
□□□□	auto, manual
□□□□□□	lut, mirror-image, dpc, shading-correction, ffc

FW □□ – □□□□

□□□□/□□	internal, software, external
□□□□□□	User Sets, POE, PWM(4), Sequencer,

□□□□

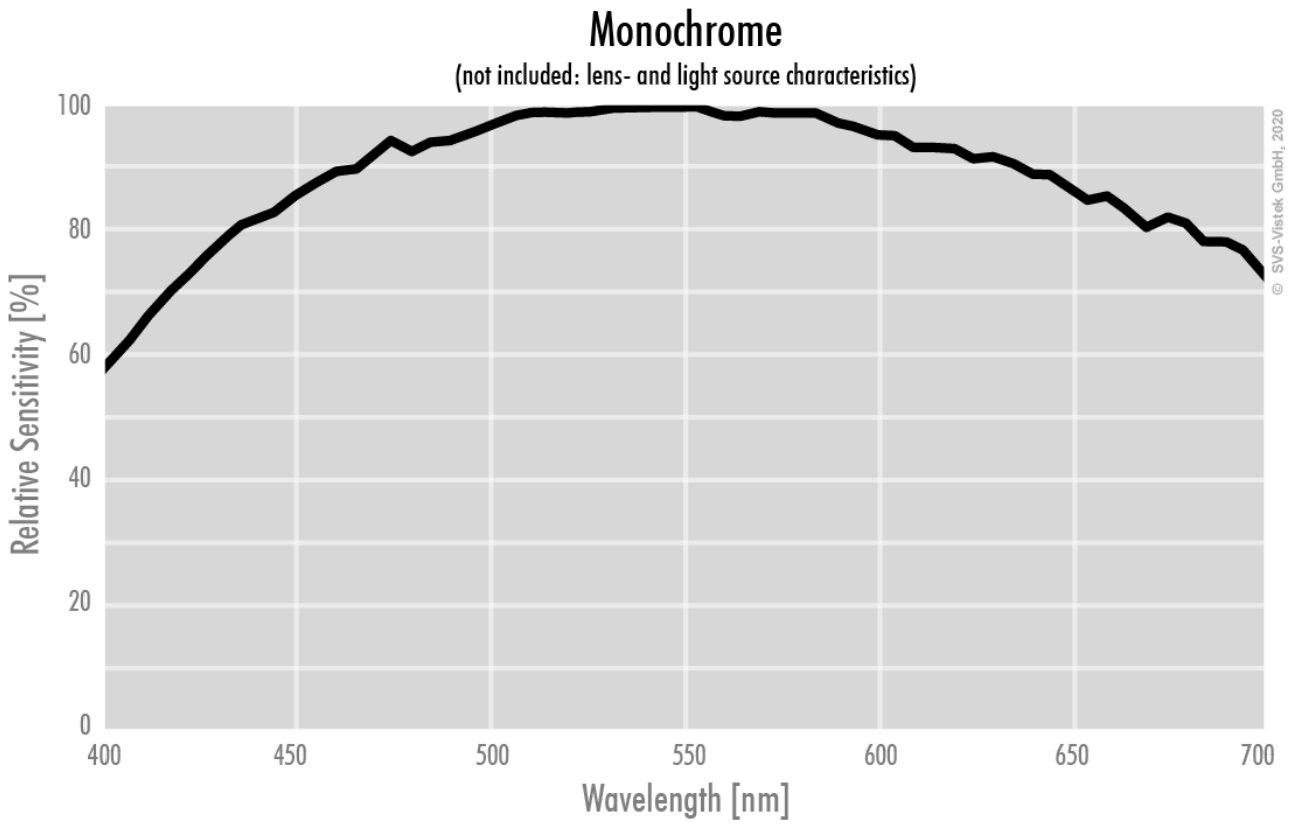
Monochrome
(not included: lens- and light source characteristics)
Relative Sensitivity [%]
100
80
60
40
20
0
400
450
500
550
600
650
700
Wavelength [nm]
© SVS-Vistek GmbH, 2020

□□□□

front

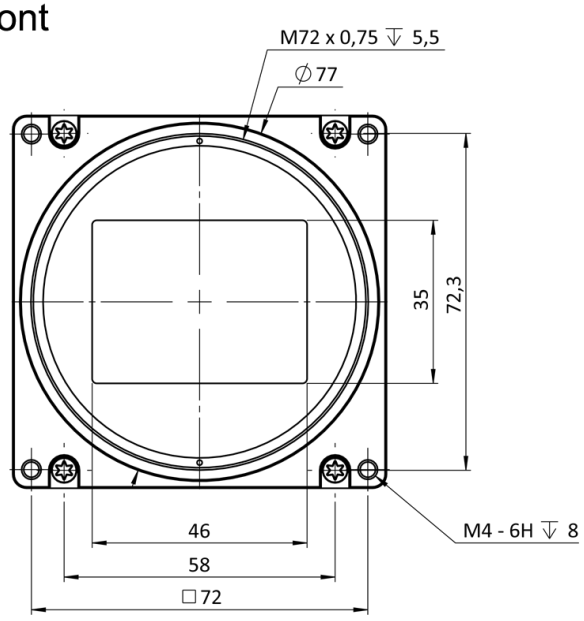

back

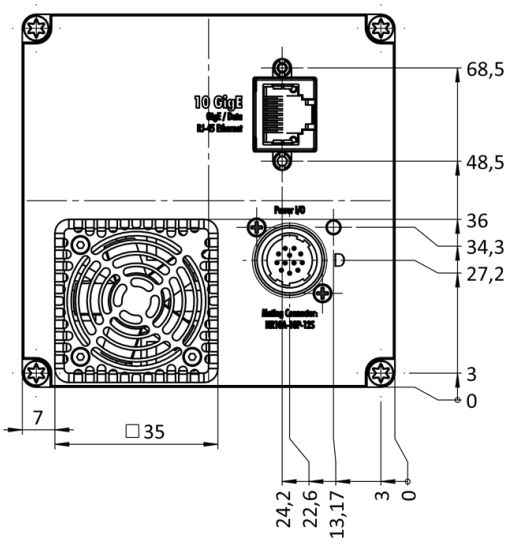

cross section

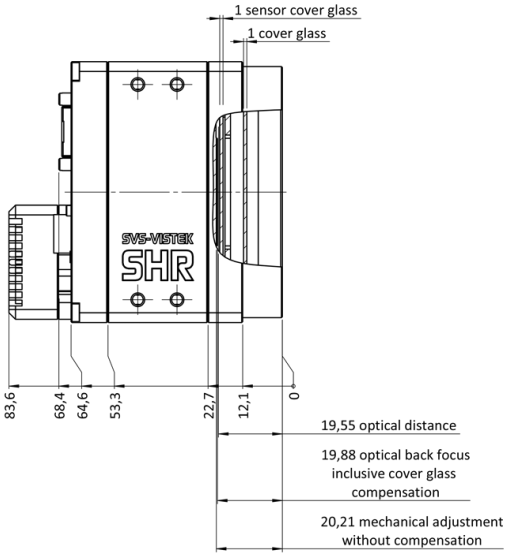

right side

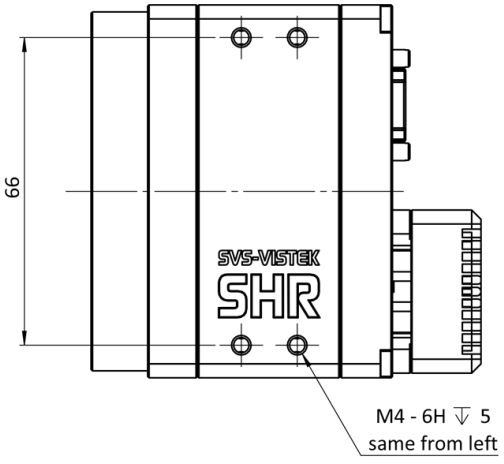

top

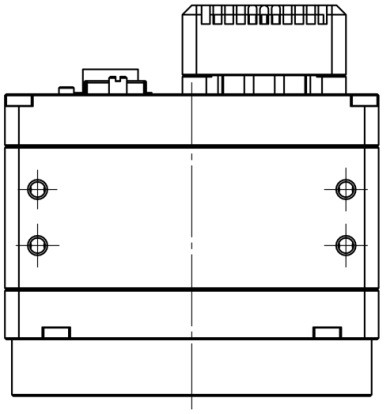

bottom

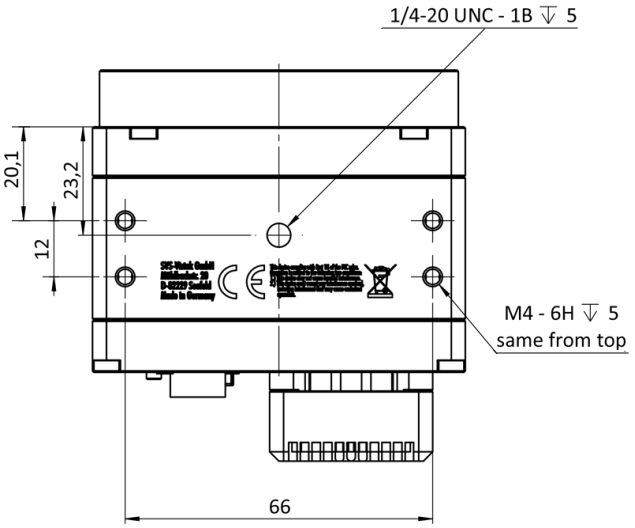

3D

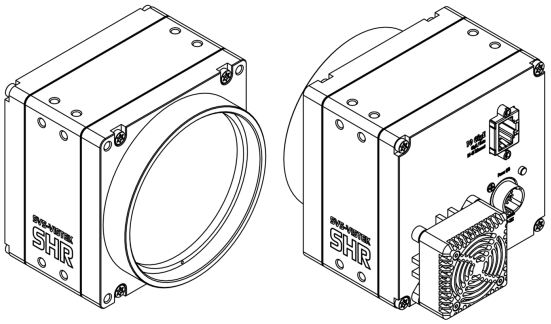

I/O □□□□

Hirose 12 Pin

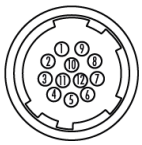

1	VIN –	(GND)	7	OUT 1	(open drain)
2	VIN +	(10 V to 25 V DC)	8	OUT 2	(open drain)
3	IN 4	(RXD RS232)	9	IN 3 +	(opto In +)
4	OUT 4	(TXD RS232)	10	IN 3 –	(opto In –)
5	IN 1	(0 - 24V)	11	OUT 3	(open drain)
6	IN 2	(0 - 24V)	12	OUT 0	(open drain)