Allied Vision



HR CoaXPress

hr49MCX12

□□	
□□	hr49MCX12
□□□□	F004183
□□□□	HR CoaXPress
□□	Available

□□□	
□□□□□	Area scan
□□	Mono
□□	Visible
□□□□	400 nm to 1000 nm
□□□	7,008 × 7,000 (49.00 MP)
□□□□□	Gpixel GMAX3265-49
□□□□□ (□□)	cmos
□□□□	Global shutter (GS)
□□□□□	22.43 × 22.4 mm (31.7 mm, Type 2.3)
□□□□	3.20 µm × 3.20 µm

□□□□	
□□□□□	8-bit, 10-bit
□□□□□□	mono8, mono10

□□□□□	
□□□□□	71 fps
□□□□	12 µs to 60 s
□□	0.0 dB to 18.0 dB

I/O □□□

□□□□	0 x LVDS input, 0 x LVDS output, 0 x TTL input, 0 x TTL output, 2 x 24V input, 4 x Open drain output,
□□□□□□	1 x RS232 input, 1 x RS232 output, 0 x RS422 input, 0 x RS422 output,
□□□□	1 x Optical isolated input, 0 x Optical isolated input,
I/O □□□	12-pin Hirose HR10A-10P-12S
□□□□	10 to 25VDC
□□	External: 18 W (typical)

□□□□

□□□□	-10 °C to 60 °C (□□)

□□□□

□□□□ (□ x □ x □ mm)	76 × 70 × 70
□□□/□□□□	N-BK7 - AR coating
□□□□	IP30
□□□□	M58x0.75
□□	420 g

□□□□□□ FPGA

□□□□□□□ (Flash)	32 MByte

□□

□□□□	cxp-12 with 4 connections
□□□□□	(micro-BNC)
□□□□	CoaXPress 2.0

FW □□ – □□□□

□□□□	manual, auto, external
□□□□	auto, manual
□□□□□□	roi, lut, mirror-image, dpc, shading-correction, ffc

FW □□ – □□□□

□□□□/□□	internal, software, external
□□□□□□	User Sets, PWM(4), Sequencer,

□□□□

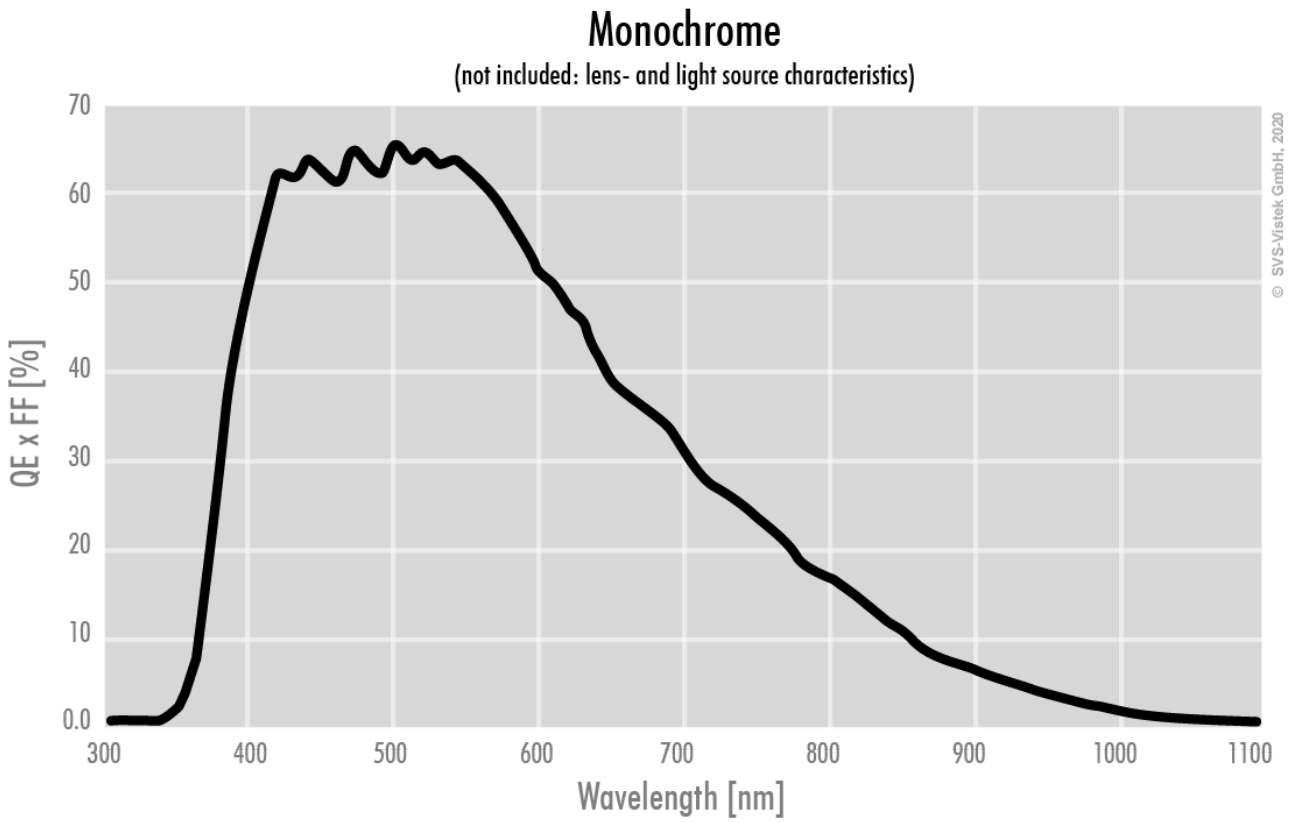
Monochrome
(not included: lens- and light source characteristics)
QE x FF [%]
70
60
50
40
30
20
10
0.0
300
400
500
600
700
800
900
1000
1100
Wavelength [nm]
© SVS-Vistek GmbH, 2020

□□□□

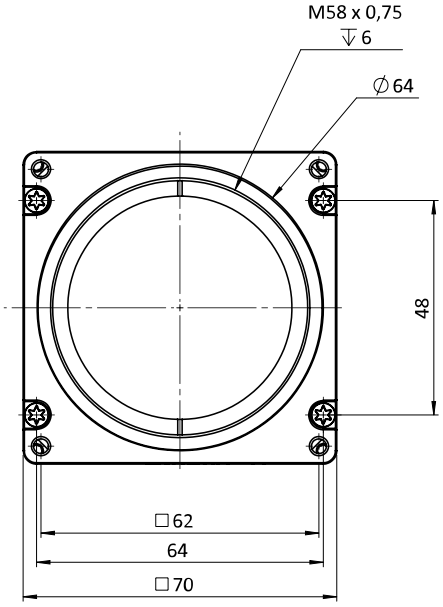
M58 x 0,75
↧6
∅64
48
□62
64
□70

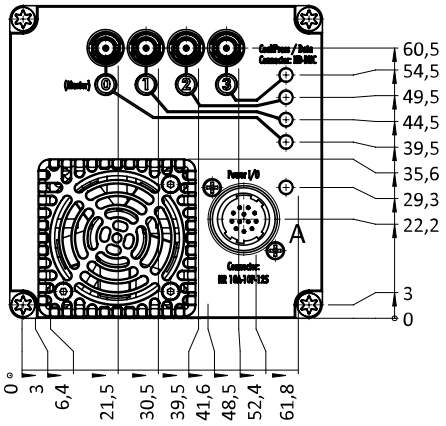
60,5
54,5
49,5
44,5
39,5
35,6
29,3
22,2
3
0
A
0
3
6,4
21,5
30,5
39,5
41,6
48,5
52,4
61,8

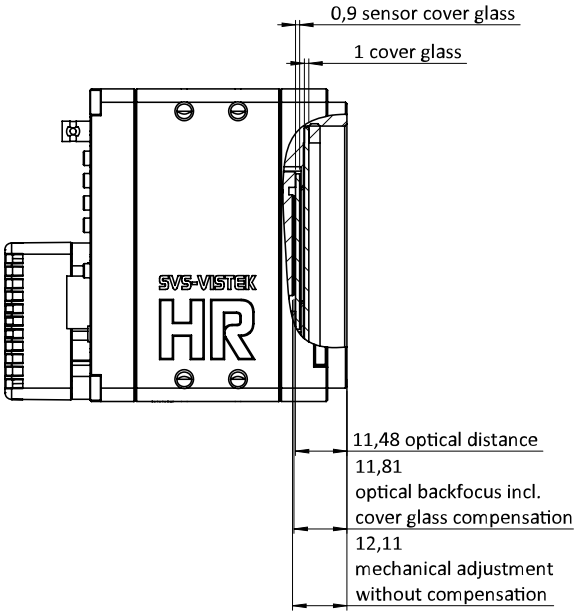
0,9 sensor cover glass
1 cover glass
SVS-VISTEK
HR
11,48 optical distance
11,81
optical backfocus incl.
cover glass compensation
12,11
mechanical adjustment
without compensation

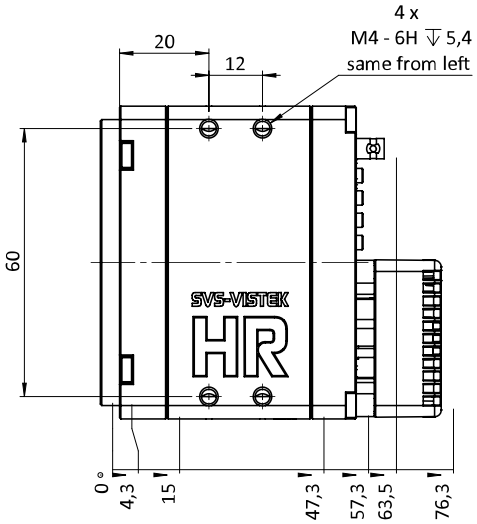
4 x
M4 - 6H ↧5,4
same from left
20
12
60
SVS-VISTEK
HR
0
4,3
15
47,3
57,3
63,5
76,3

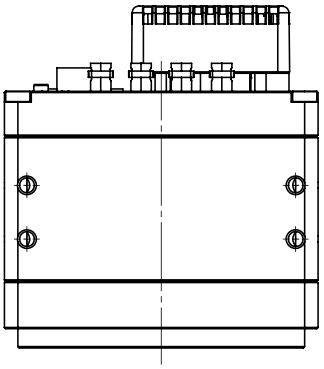

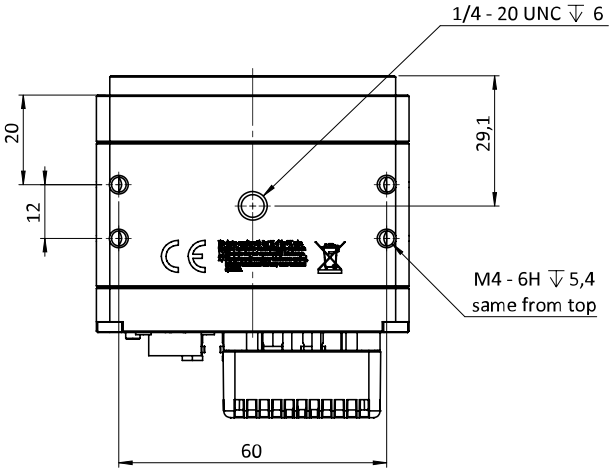

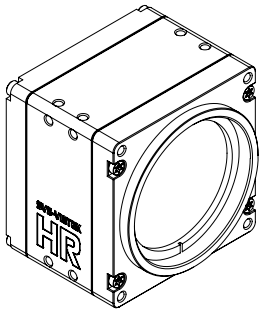

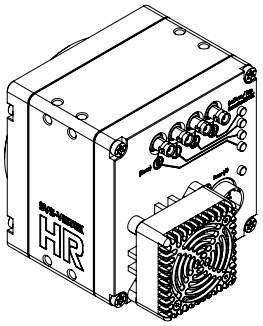

I/O □□□□

Hirose 12 Pin

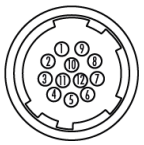

1	VIN –	(GND)	7	OUT 1	(open drain)
2	VIN +	(10 V to 25 V DC)	8	OUT 2	(open drain)
3	IN 4	(RXD RS232)	9	IN 3 +	(opto In +)
4	OUT 4	(TXD RS232)	10	IN 3 –	(opto In –)
5	IN 1	(0 - 24V)	11	OUT 3	(open drain)
6	IN 2	(0 - 24V)	12	OUT 0	(open drain)