Allied Vision



HR CoaXPress

hr51CCX

□□	
□□	hr51CCX
□□□□	F004103
□□□□	HR CoaXPress
□□	Available

□□□	
□□□□□	Area scan
□□	Color
□□	Visible
□□□□	400 nm to 1000 nm
□□□	8,416 × 6,032 (51.00 MP)
□□□□□	Gpixel GMAX4651
□□□□□ (□□)	cmos
□□□□	Global shutter (GS)
□□□□□	38.71 × 27.75 mm (47.63 mm, Type Full Frame)
□□□□	4.60 µm × 4.60 µm

□□□□	
□□□□□	8-bit, 12-bit
RGB □□□□	bayer8, bayer12

□□□□	
□□□□	65 dB
□□□	42.6 dB

□□□□□

□□□□□	30 fps
□□□□	16 µs to 60 s
□□	0.0 dB to 40.0 dB

I/O □□□

□□□□	0 x LVDS input, 0 x LVDS output, 0 x TTL input, 0 x TTL output, 2 x 24V input, 4 x Open drain output,
□□□□□□	1 x RS232 input, 1 x RS232 output, 0 x RS422 input, 0 x RS422 output,
□□□□	1 x Optical isolated input, 0 x Optical isolated input,
I/O □□□	12-pin Hirose HR10A-10P-12S
□□□□	10 to 25VDC, Power over CoaXPress
□□	External: 13 W (typical)

□□□□

□□□□	-10 °C to 45 °C (□□□□□□)

□□□□

□□□□ (□ x □ x □ mm)	76 × 70 × 70
□□□/□□□□	IR-Cut 680
□□□□	IP30
□□□□	M58x0.75
□□	380 g

□□□□□□ FPGA

□□□□□□□ (Flash)	160 MByte

□□

□□□□	cxp-6 with 4 connections
□□□□□	(Din1.0/2.3)
□□□□	CoaXPress 1.0

FW □□ – □□□□

□□□□	manual, auto
□□□□	auto, manual

FW □□ – □□□□

□□□□□	auto, manual
□□□□□□	roi, lut, mirror-image

FW □□ – □□□□

□□□□/□□	internal, software, external
□□□□□□	PoCxP, User Sets, PWM(4), Sequencer,

□□□□

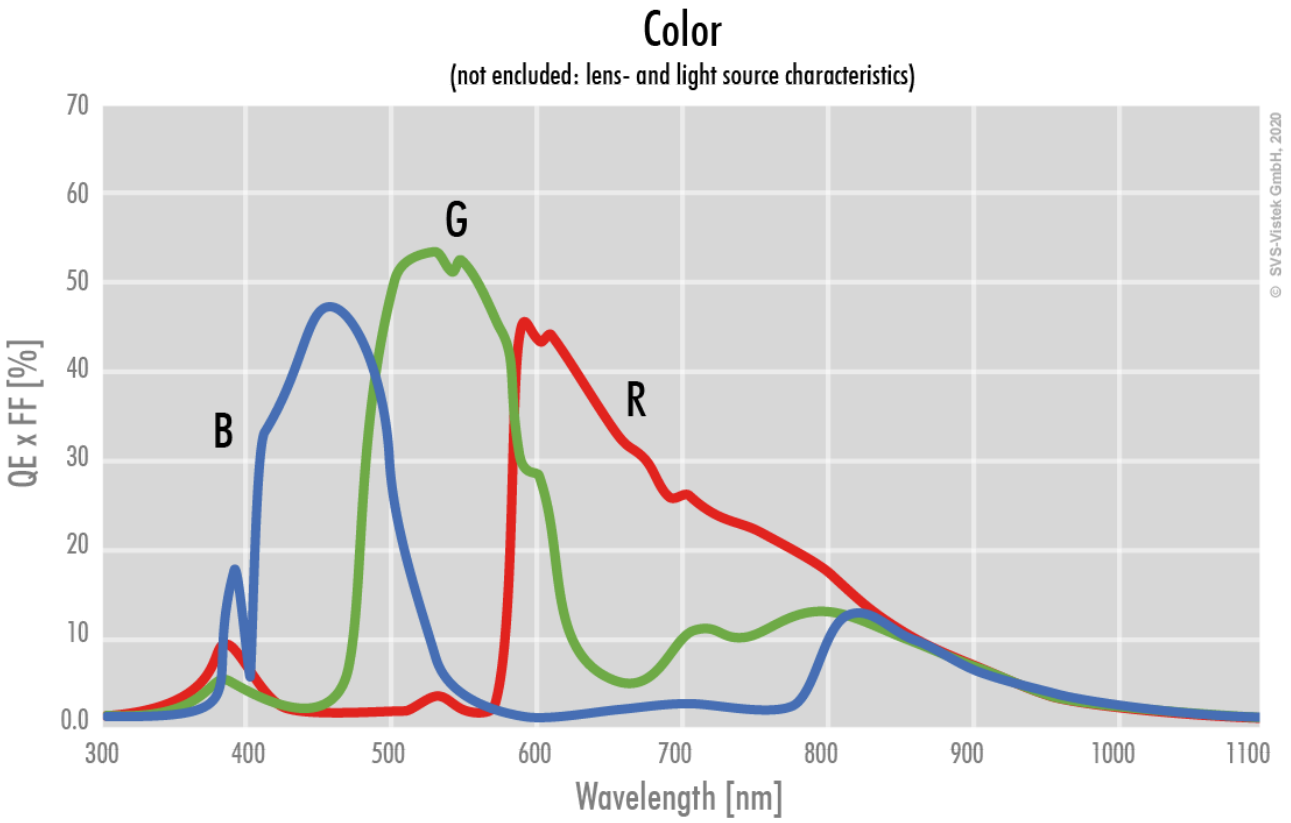
Color
(not encluded: lens- and light source characteristics)
QE x FF [%]
70
60
50
40
30
20
10
0.0
300
400
500
600
700
800
900
1000
1100
Wavelength [nm]
B
G
R
© SVS-Vistek GmbH, 2020

□□□□

front

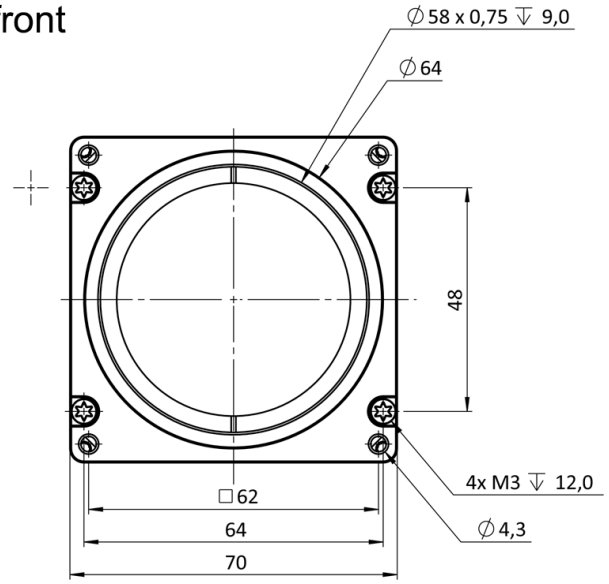

back

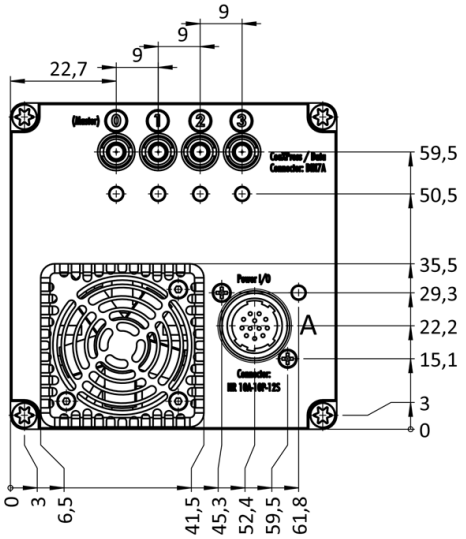

cross section

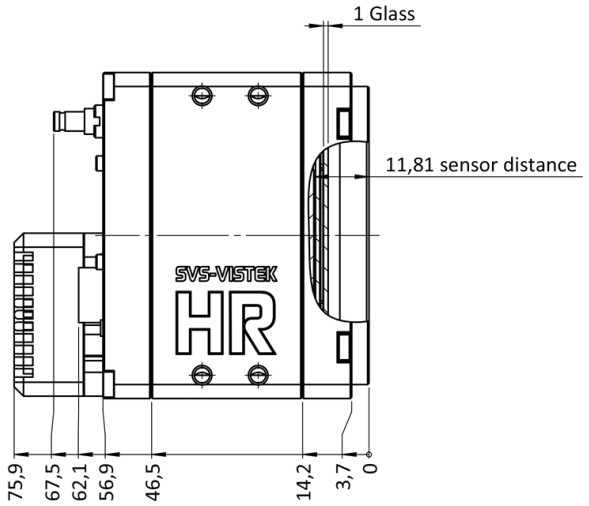

right side

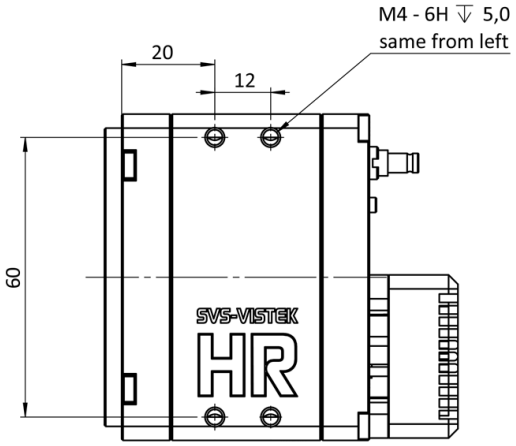

top

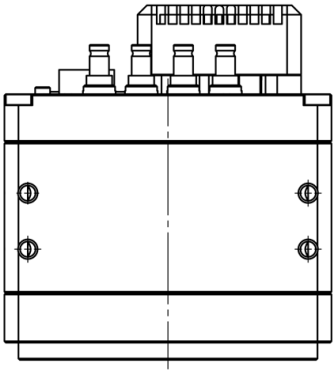

bottom

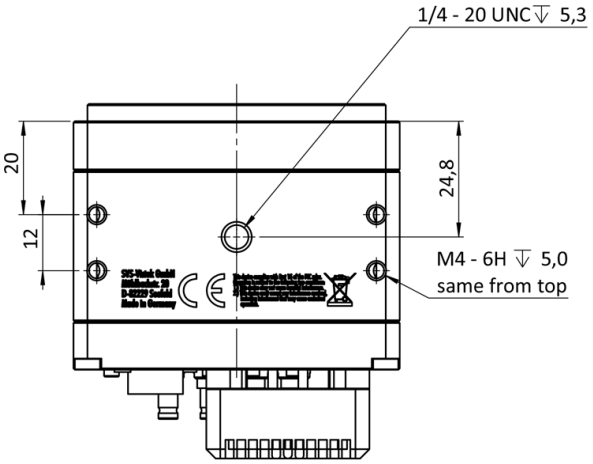

3D

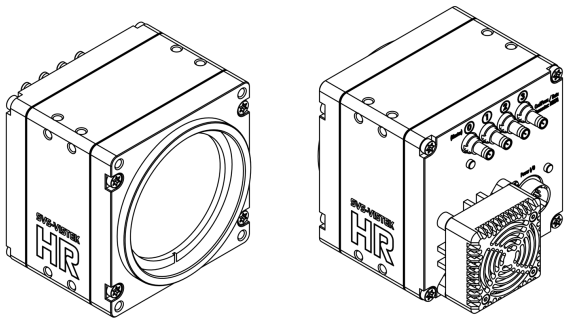

I/O □□□□

Hirose 12 Pin

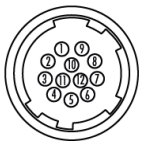

1	VIN –	(GND)	7	OUT 1	(open drain)
2	VIN +	(10 V to 25 V DC)	8	OUT 2	(open drain)
3	IN 4	(RXD RS232)	9	IN 3 +	(opto In +)
4	OUT 4	(TXD RS232)	10	IN 3 –	(opto In –)
5	IN 1	(0 - 24V)	11	OUT 3	(open drain)
6	IN 2	(0 - 24V)	12	OUT 0	(open drain)