Allied Vision



HR CoaXPress

hr342MCX

□□	
□□	hr342MCX
□□□□	F004072
□□□□	HR CoaXPress
□□	Available

□□□	
□□□□□	Area scan
□□	Mono
□□	Visible
□□□□	400 nm to 1000 nm
□□□	6,464 × 4,852 (31.40 MP)
□□□□□	Sony IMX342
□□□□□ (□□)	cmos
□□□□	Global shutter (GS)
□□□□□	22.3 × 16.74 mm (27.88 mm, Type APS-C)
□□□□	3.45 µm × 3.45 µm

□□□□	
□□□□□	8-bit, 12-bit
□□□□□□	mono8, mono12

□□□□	
□□□□	70.5 dB
□□□	39.9 dB

□□□□□

□□□□□	35.7 fps
□□□□	19 µs to 60 s
□□	0.0 dB to 48.0 dB

I/O □□□

□□□□	0 x LVDS input, 0 x LVDS output, 0 x TTL input, 0 x TTL output, 2 x 24V input, 4 x Open drain output,
□□□□□□	1 x RS232 input, 1 x RS232 output, 0 x RS422 input, 0 x RS422 output,
□□□□	1 x Optical isolated input, 0 x Optical isolated input,
I/O □□□	12-pin Hirose HR10A-10P-12S
□□□□	10 to 25VDC, Power over CoaXPress
□□	External: 12 W (typical)

□□□□

□□□□	-10 °C to 65 °C (□□)

□□□□

□□□□ (□ x □ x □ mm)	78 × 70 × 70
□□□/□□□□	N-BK7 - AR coating
□□□□	IP30
□□□□	M58x0.75
□□	400 g

□□□□□□ FPGA

□□□□□□□ (Flash)	160 MByte

□□

□□□□	cxp-6 with 4 connections
□□□□□	(Din1.0/2.3)
□□□□	CoaXPress 1.0

FW □□ – □□□□

□□□□	manual, auto
□□□□	auto, manual

FW □□ – □□□□

□□□□□□□	roi, lut, mirror-image, dpc, shading-correction, ffc

FW □□ – □□□□

□□□□/□□	internal, software, external
□□□□□□□	PoCxP, User Sets, PWM(4), Sequencer,

□□□□

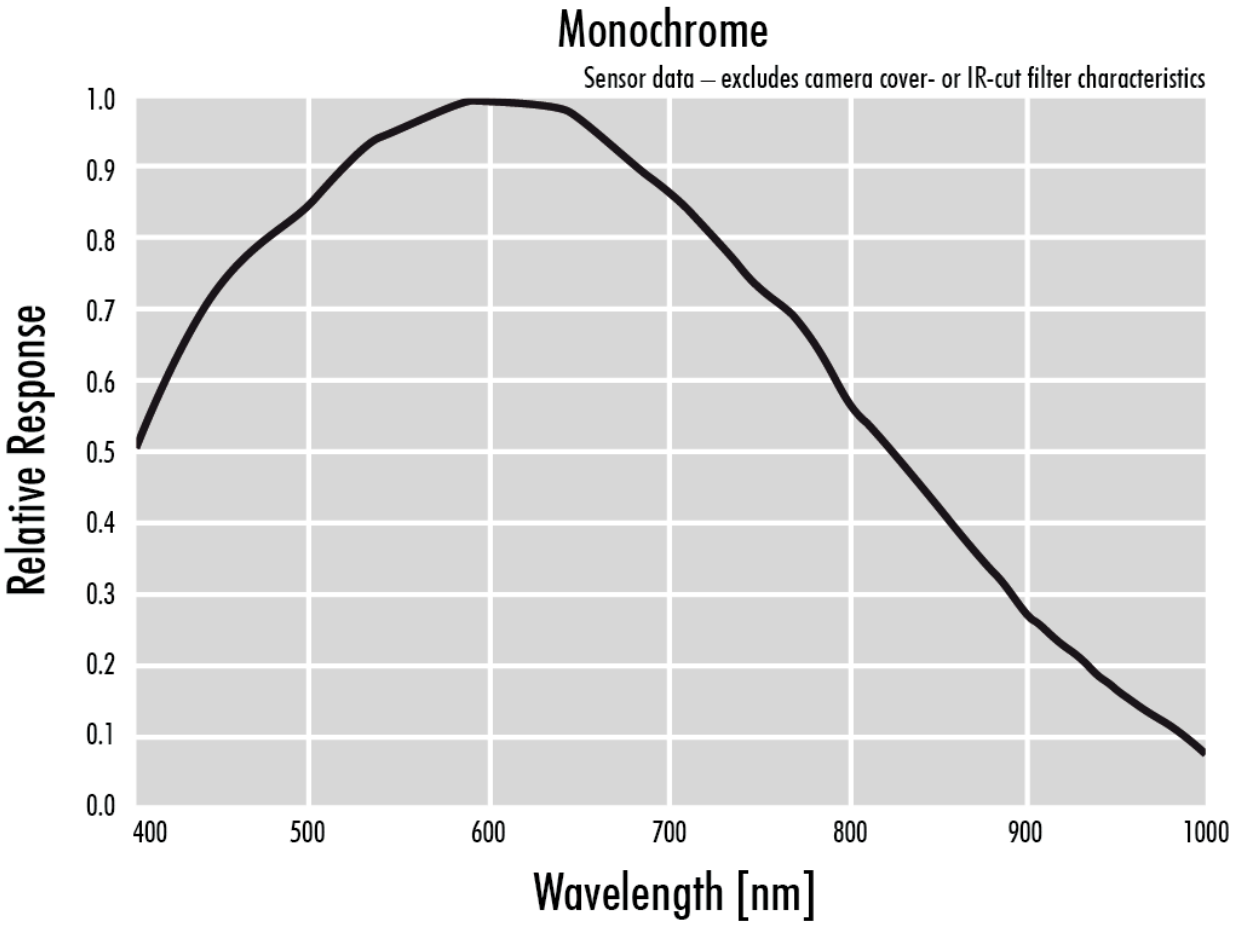
Monochrome
Sensor data – excludes camera cover- or IR-cut filter characteristics
Relative Response
1.0
0.9
0.8
0.7
0.6
0.5
0.4
0.3
0.2
0.1
0.0
400
500
600
700
800
900
1000
Wavelength [nm]

□□□□

front view

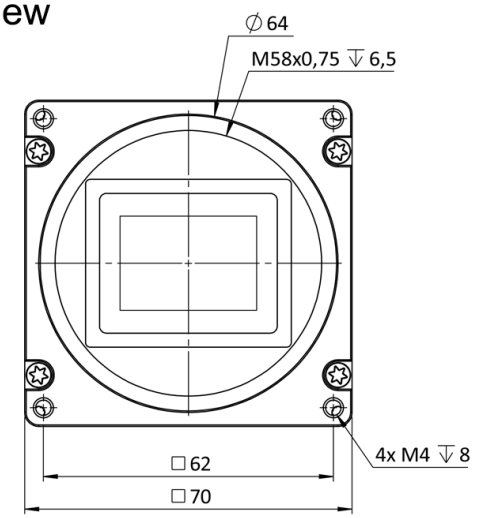

back view

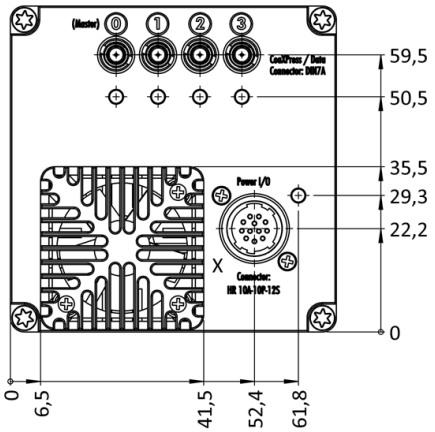

cross section

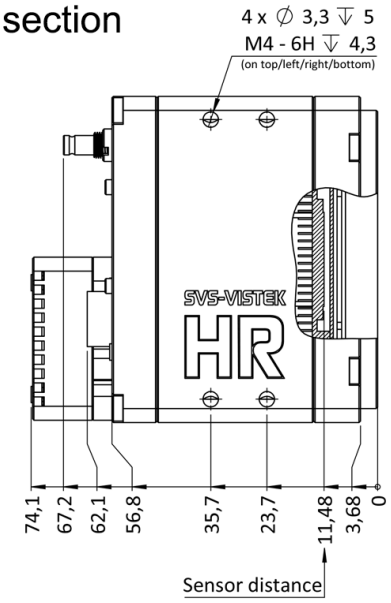

right view

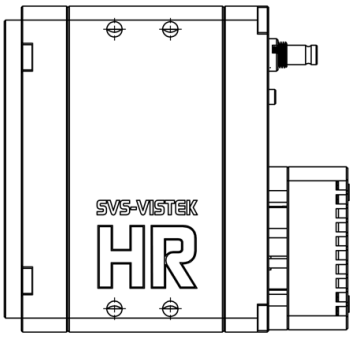

top view

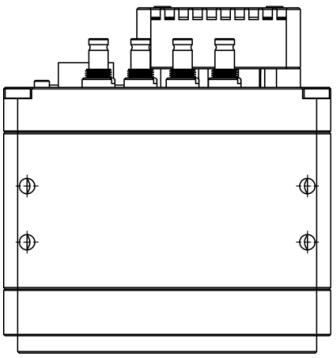

bottom view

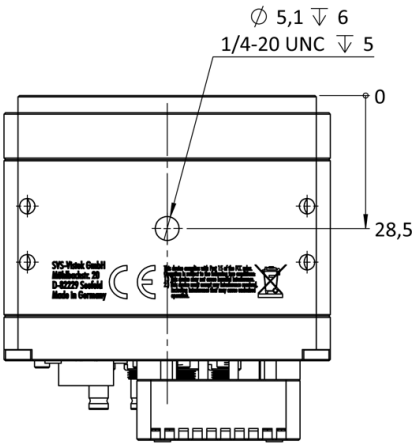

3D view

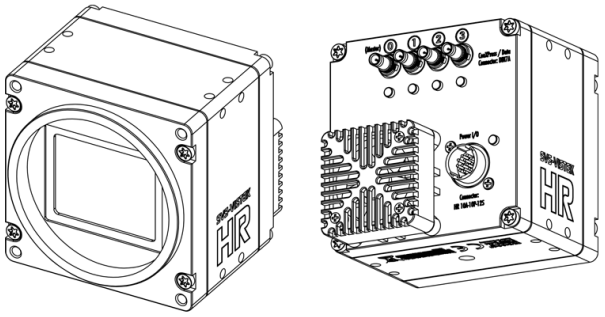

I/O □□□□

Hirose 12 Pin

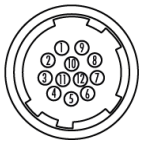

1	VIN –	(GND)	7	OUT 1	(open drain)
2	VIN +	(10 V to 25 V DC)	8	OUT 2	(open drain)
3	IN 4	(RXD RS232)	9	IN 3 +	(opto In +)
4	OUT 4	(TXD RS232)	10	IN 3 –	(opto In –)
5	IN 1	(0 - 24V)	11	OUT 3	(open drain)
6	IN 2	(0 - 24V)	12	OUT 0	(open drain)