Allied Vision



# HR Camera Link

## hr49MCL

| □□ | |
|---|---|
| □□ | hr49MCL |
| □□□□ | F004136 |
| □□□□ | HR Camera Link |
| □□ | Available |

| □□□ | |
|---|---|
| □□□□□ | Area scan |
| □□ | Mono |
| □□ | Visible |
| □□□□ | 400 nm to 1000 nm |
| □□□ | 7,008 × 7,000 (49.00 MP) |
| □□□□□ | Gpixel GMAX3265-49 |
| □□□□□ (□□) | cmos |
| □□□□ | Global shutter (GS) |
| □□□□□ | 22.43 × 22.4 mm (31.7 mm, Type 2.3) |
| □□□□ | 3.20 µm × 3.20 µm |

| □□□□ | |
|---|---|
| □□□□□ | 8-bit, 10-bit |
| □□□□□□ | mono8, mono10 |

| □□□□□ | |
|---|---|
| □□□□□ | 17 fps |
| □□□□ | 21 µs to 60 s |
| □□ | 0.0 dB to 18.0 dB |

## I/O □□□

| | |
|---|---|
| □□□□ | 0 x LVDS input, 0 x LVDS output, 0 x TTL input, 0 x TTL output, 2 x 24V input, 4 x Open drain output, |
| □□□□□□ | 1 x RS232 input, 1 x RS232 output, 0 x RS422 input, 0 x RS422 output, |
| □□□□ | 1 x Optical isolated input, 0 x Optical isolated input, |
| I/O □□□ | 12-pin Hirose HR10A-10P-12S |
| □□□□ | 10 to 25VDC |
| □□ | External: 9 W (typical) |

## □□□□

| | |
|---|---|
| □□□□ | -10 °C to 45 °C (□□□□□□) |

## □□□□

| | |
|---|---|
| □□□□ (□ x □ x □ mm) | 76 × 70 × 70 |
| □□□□ | IP30 |
| □□□□ | M58x0.75 |
| □□ | 420 g |

## □□□□□□ FPGA

| | |
|---|---|
| □□□□□□□ (Flash) | 32 MByte |

## □□

| | |
|---|---|
| □□□□ | camera link 80-bit |
| □□□□□ | SDR |

## FW □□ – □□□□

| | |
|---|---|
| □□□□ | manual, auto, external |
| □□□□ | auto, manual |
| □□□□□□ | lut, mirror-image, dpc, shading-correction, ffc |

## FW □□ – □□□□

| | |
|---|---|
| □□□□/□□ | internal, software, external |
| □□□□□□ | User Sets, PWM(4), Sequencer, |

## □□□□

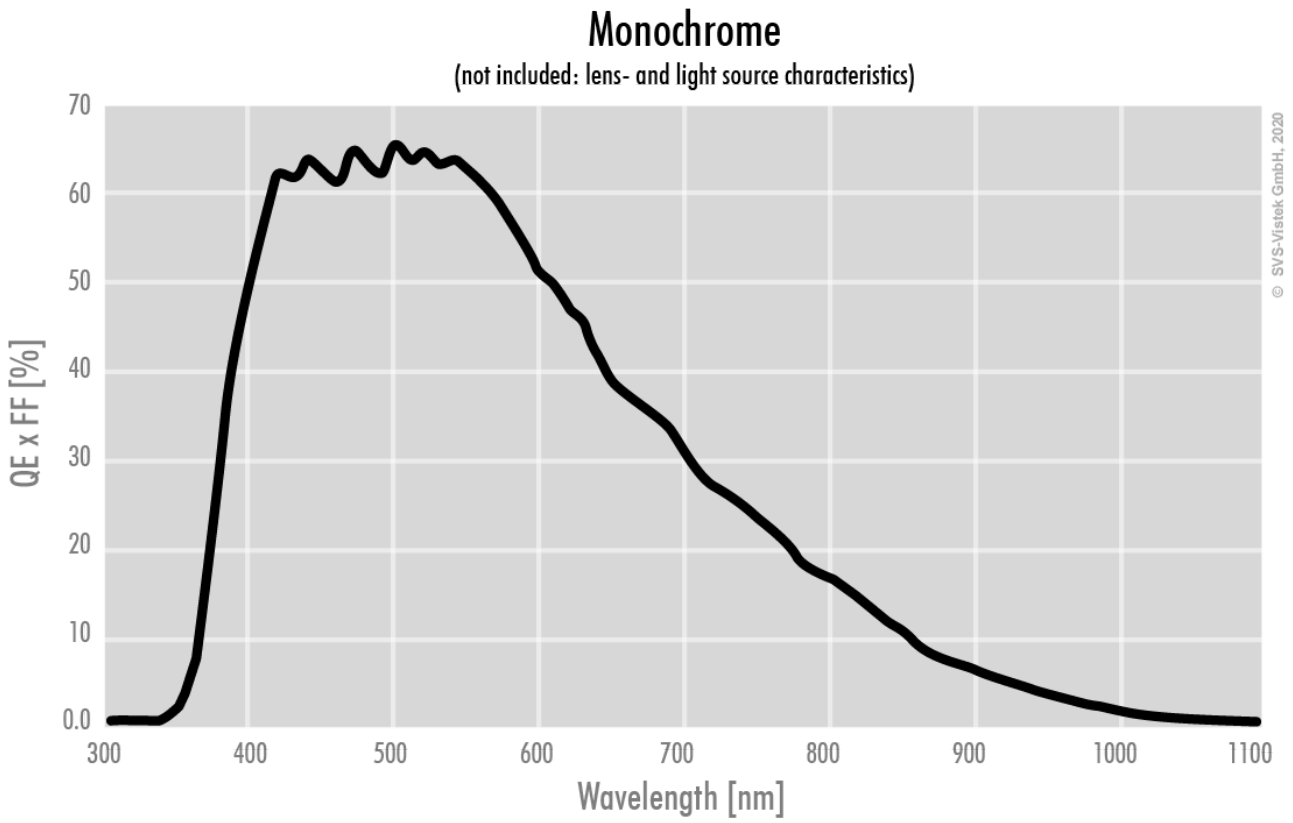
Monochrome
(not included: lens- and light source characteristics)
QE x FF [%]
70
60
50
40
30
20
10
0.0
300
400
500
600
700
800
900
1000
1100
Wavelength [nm]
© SVS-Vistek GmbH, 2020

## □□□□

### front

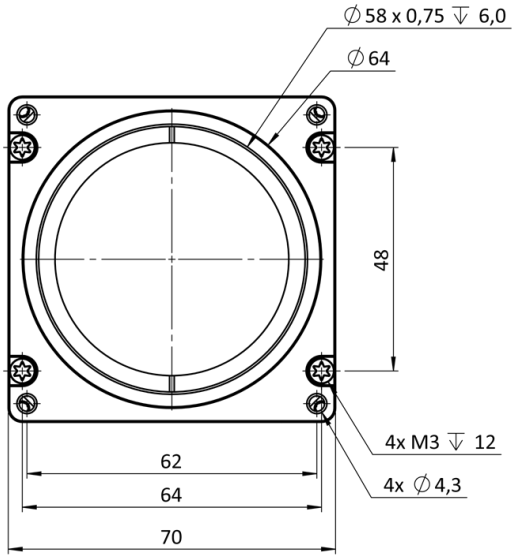


### back

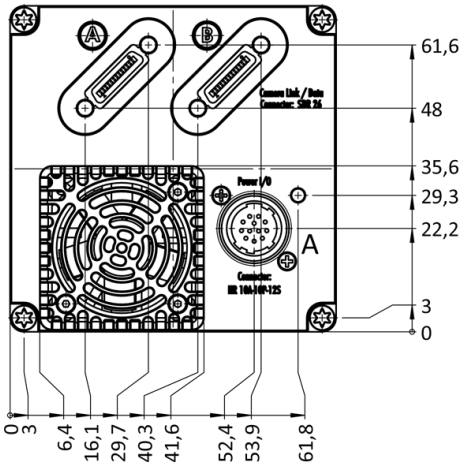


### cross section

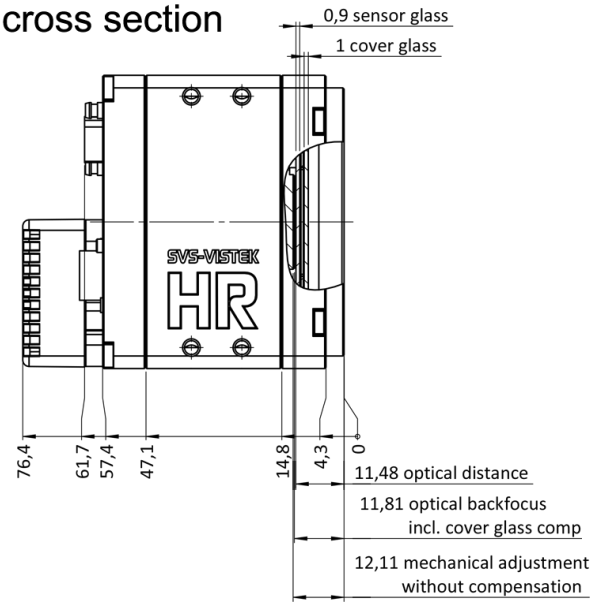


### right side

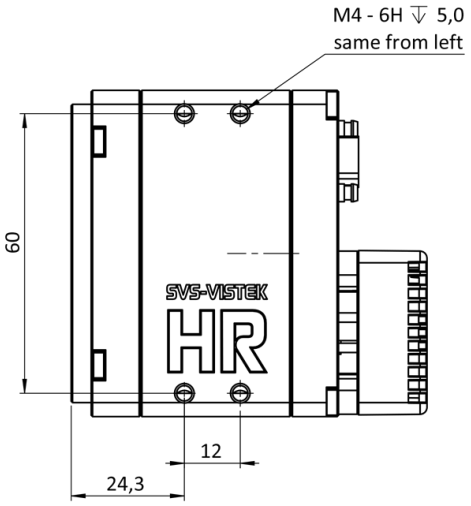

top

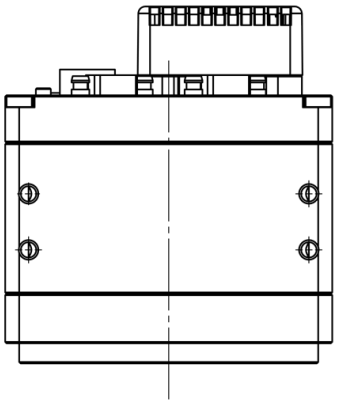

bottom

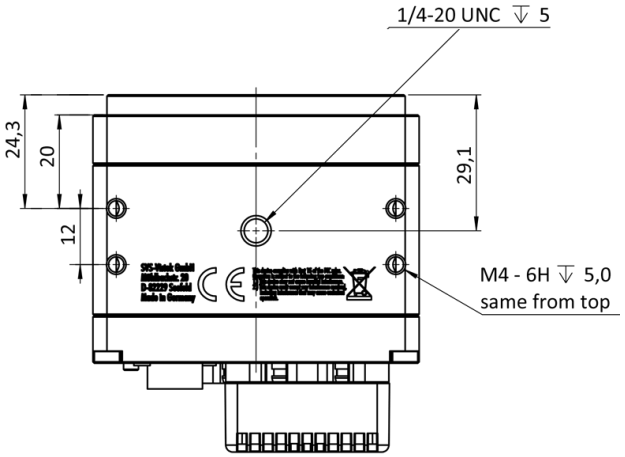


3D

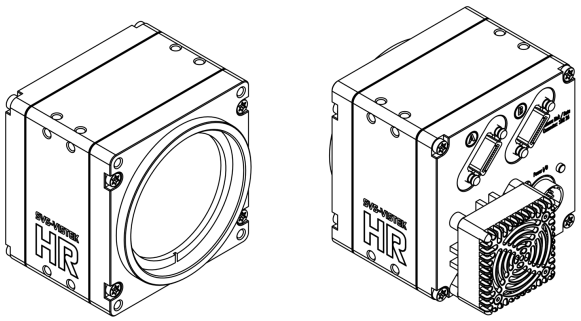

## I/O □□□□

Hirose 12 Pin

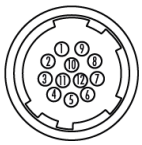

| | | | | | |
|---|---|---|---|---|---|
| 1 | VIN – | (GND) | 7 | OUT 1 | (open drain) |
| 2 | VIN + | (10 V to 25 V DC) | 8 | OUT 2 | (open drain) |
| 3 | IN 4 | (RXD RS232) | 9 | IN 3 + | (opto In + ) |
| 4 | OUT 4 | (TXD RS232) | 10 | IN 3 – | (opto In –) |
| 5 | IN 1 | (0 - 24V) | 11 | OUT 3 | (open drain) |
| 6 | IN 2 | (0 - 24V) | 12 | OUT 0 | (open drain) |