Allied Vision



HR Camera Link

hr25MCL

□□	
□□	hr25MCL
□□□□	F004051
□□□□	HR Camera Link
□□	Available

□□□	
□□□□□	Area scan
□□	Mono
□□	Visible
□□□□	400 nm to 1000 nm
□□□	5,120 × 5,120 (25.00 MP)
□□□□□	ON Semi PYTHON 25K
□□□□□ (□□)	cmos
□□□□	Global shutter (GS)
□□□□□	23.04 × 23.04 mm (32.58 mm, Type APS-H)
□□□□	4.50 µm × 4.50 µm

□□□□	
□□□□□	8-bit, 10-bit
□□□□□□	bayer8, bayer10

□□□□□	
□□□□□	31.8 fps
□□□□	21 µs to 60 s
□□	0.0 dB to 18.0 dB

I/O □□□

□□□□	0 x LVDS input, 0 x LVDS output, 0 x TTL input, 0 x TTL output, 2 x 24V input, 4 x Open drain output,
□□□□□□	1 x RS232 input, 1 x RS232 output, 0 x RS422 input, 0 x RS422 output,
□□□□	1 x Optical isolated input, 0 x Optical isolated input,
I/O □□□	12-pin Hirose HR10A-10P-12S
□□□□	10 to 25VDC
□□	External: 10 W (typical)

□□□□

□□□□ (□□)	-10 °C to 65 °C

□□□□

□□□□ (□ x □ x □ mm)	56 × 70 × 70
□□□□	IP40
□□□□	M58x0.75
□□	420 g

□□□□□□ FPGA

□□□□□□□ (Flash)	32 MByte

□□

□□□□	camera link 80-bit
□□□□□	SDR

FW □□ – □□□□

□□□□	manual, auto, external
□□□□	auto, manual
□□□□□□	lut, mirror-image, dpc, shading-correction, ffc

FW □□ – □□□□

□□□□/□□	internal, software, external
□□□□□□	User Sets, PWM(4), Sequencer,

□□□□

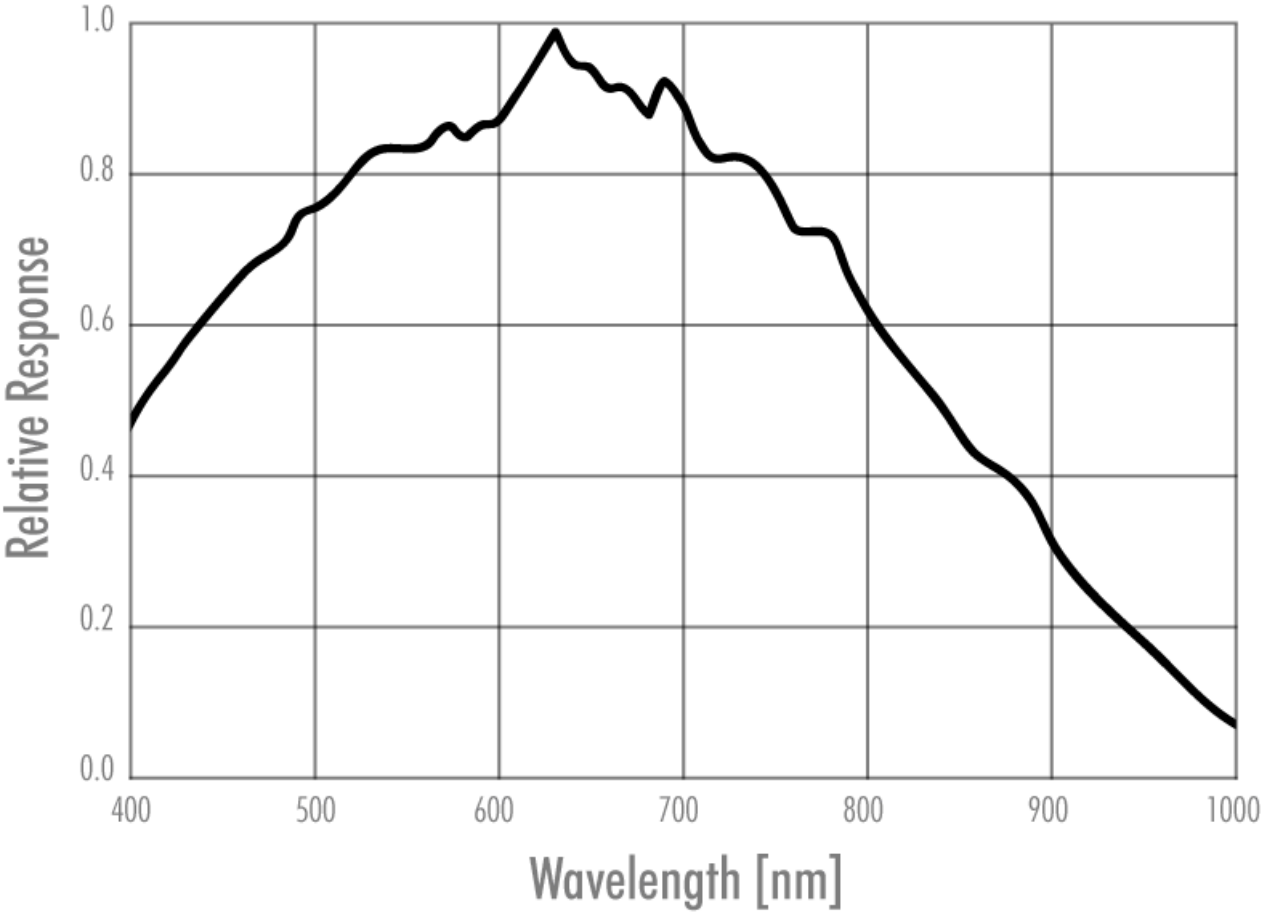
1.0
0.8
0.6
0.4
0.2
0.0
Relative Response
400
500
600
700
800
900
1000
Wavelength [nm]

□□□□

front view

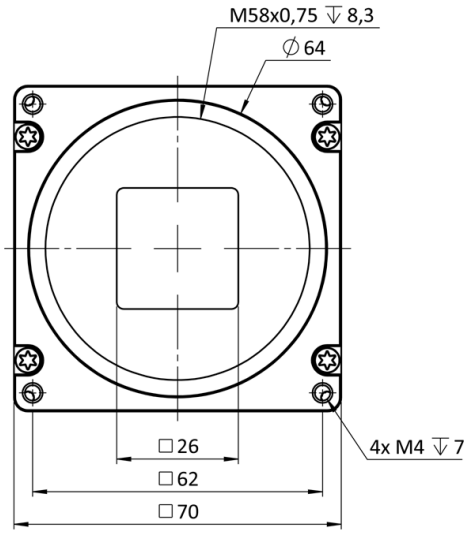

back view

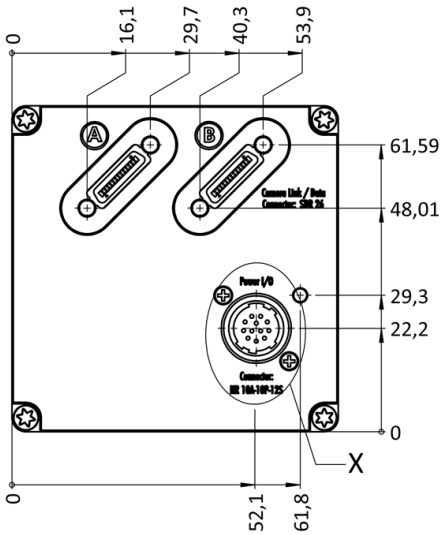

cross section

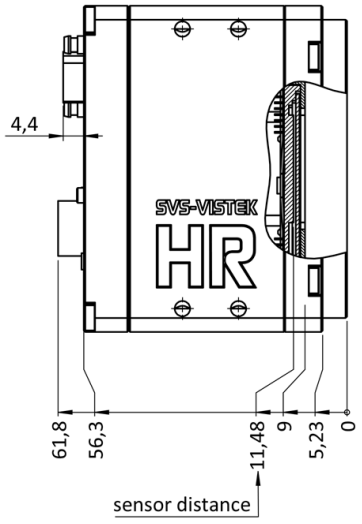

right view

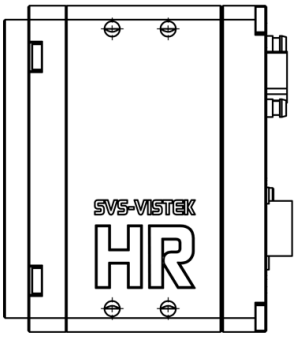

top view

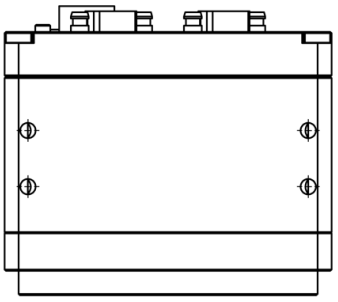

bottom view

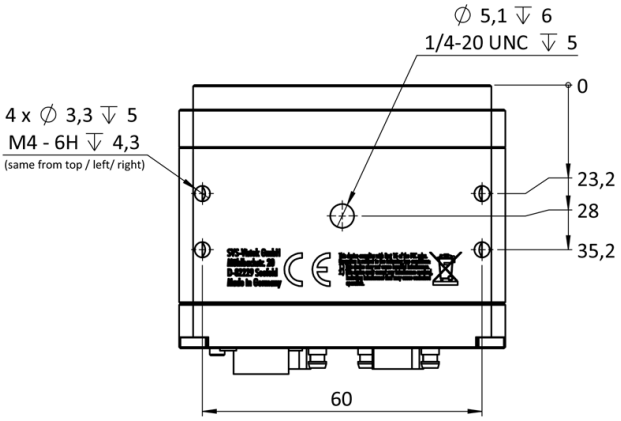

3D view



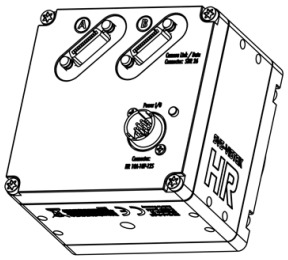

I/O □□□□

Hirose 12 Pin

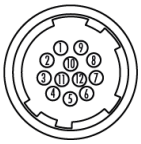

1	VIN –	(GND)	7	OUT 1	(open drain)
2	VIN +	(10 V to 25 V DC)	8	OUT 2	(open drain)
3	IN 4	(RXD RS232)	9	IN 3 +	(opto In +)
4	OUT 4	(TXD RS232)	10	IN 3 –	(opto In –)
5	IN 1	(0 - 24V)	11	OUT 3	(open drain)
6	IN 2	(0 - 24V)	12	OUT 0	(open drain)