Allied Vision



HR 10GigE

hr455MXGE-T

□□	
□□	hr455MXGE-T
□□□□	F004217
□□□□	HR 10GigE
□□	Available

□□□	
□□□□□	Area scan
□□	Mono
□□	Visible
□□□□	400 nm to 1000 nm
□□□	9,568 × 6,380 (61.00 MP)
□□□□□	Sony IMX455
□□□□□ (□□)	cmos
□□□□	Rolling shutter (RS)
□□□□□	35.98 × 23.99 mm (43.24 mm, Type 2.7)
□□□□	3.76 µm × 3.76 µm

□□□□	
□□□□□	8-bit, 12-bit, 16-bit
□□□□□□	mono8, mono12, mono16

□□□□	
□□□□	81.4 dB
□□□	47 dB

□□□□□

□□□□□	18 fps
□□□□	34 µs to 60 s
□□	0.0 dB to 36.0 dB

I/O □□□

□□□□	0 x LVDS input, 0 x LVDS output, 0 x TTL input, 0 x TTL output, 2 x 24V input, 4 x Open drain output,
□□□□□□	1 x RS232 input, 1 x RS232 output, 0 x RS422 input, 0 x RS422 output,
□□□□	1 x Optical isolated input, 0 x Optical isolated input,
I/O □□□	12-pin Hirose HR10A-10P-12S
□□□□	21 to 25VDC, Power over Ethernet (POE+)
□□	External: 30 W (typical)

□□□□

□□□□	-10 °C to 70 °C (□□)

□□□□

□□□□ (□ x □ x □ mm)	94 × 70 × 70
□□□/□□□□	N-BK7 - AR coating
□□□□	IP30
□□□□	M58x0.75
□□	590 g

□□□□□□ FPGA

□□□□□ (RAM)	448 MByte

□□

□□□□	10gige
□□□□□	(RJ-45)
□□□□	GigE Vision 2.0

FW □□ – □□□□

□□□□	manual, auto, external
□□□□	auto, manual

FW □□ – □□□□

□□□□□□□	lut, mirror-image, dpc, shading-correction, ffc

FW □□ – □□□□

□□□□/□□	internal, software, external
□□□□□□□	User Sets, POE, PWM(4), Sequencer,

□□□□

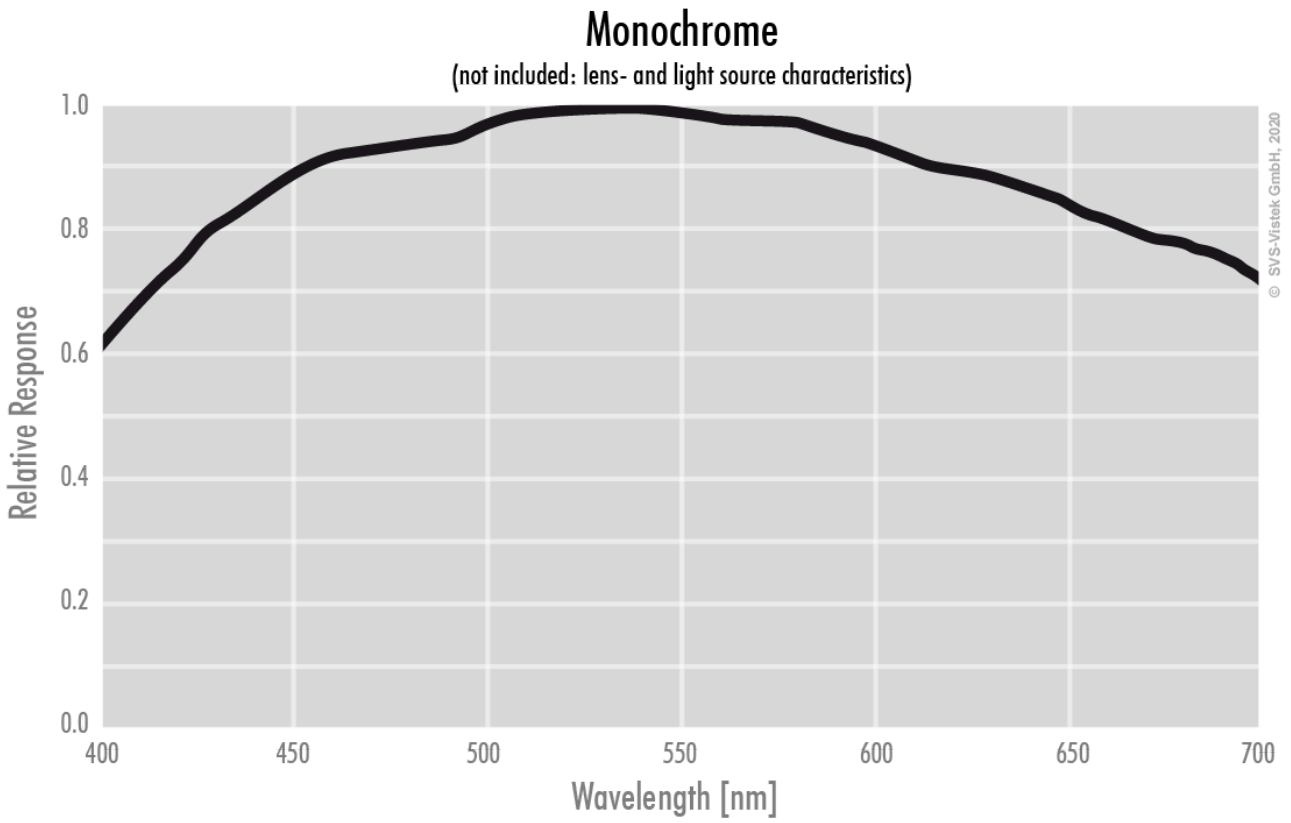
Monochrome
(not included: lens- and light source characteristics)
Relative Response
1.0
0.8
0.6
0.4
0.2
0.0
400
450
500
550
600
650
700
Wavelength [nm]
© SVS-Vistek GmbH, 2020

□□□□

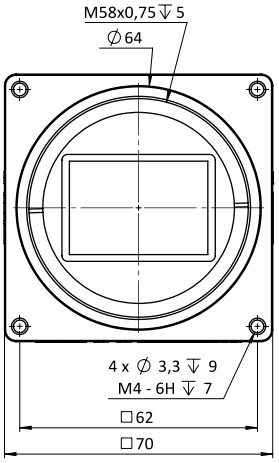
M58x0,75 ↧ 5
∅ 64
4 x ∅ 3,3 ↧ 9
M4 - 6H ↧ 7
□ 62
□ 70

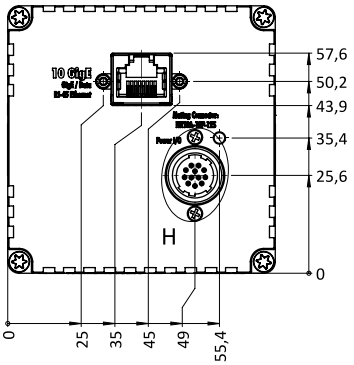
57,6
50,2
43,9
35,4
25,6
0
H
0
25
35
45
49
55,4

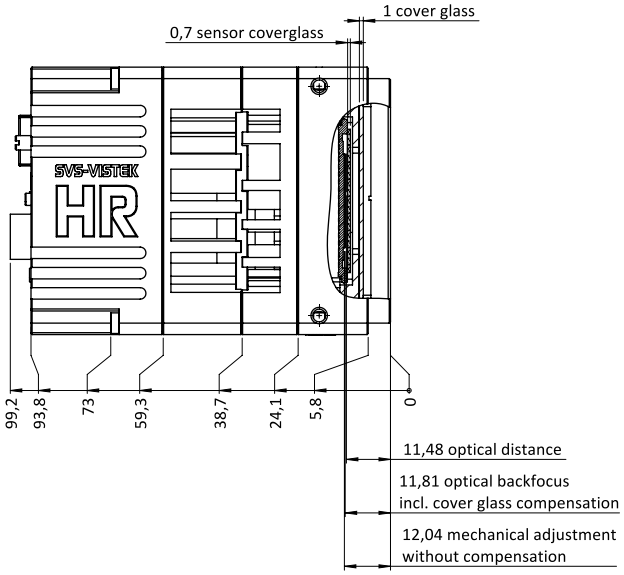
1 cover glass
0,7 sensor coverglass
SVS-VISTEK
HR
99,2
93,8
73
59,3
38,7
24,1
5,8
0
11,48 optical distance
11,81 optical backfocus
incl. cover glass compensation
12,04 mechanical adjustment
without compensation

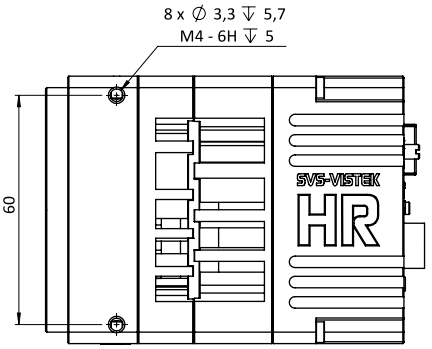
8 x ∅ 3,3 ↧ 5,7
M4 - 6H ↧ 5
60
SVS-VISTEK
HR

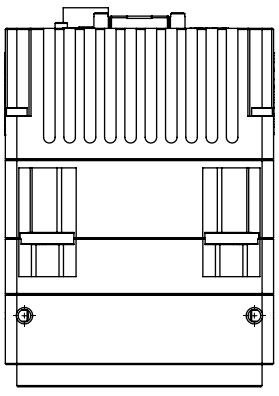

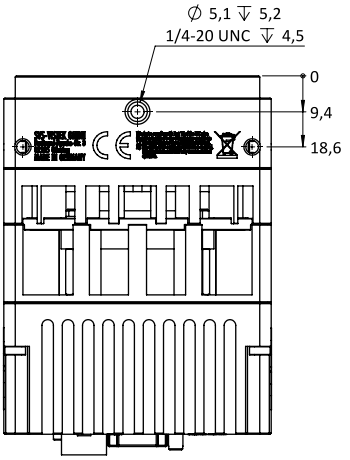
∅ 5,1 ↧ 5,2
1/4-20 UNC ↧ 4,5
0
9,4
18,6

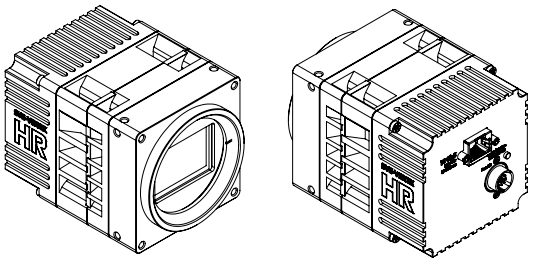

I/O □□□□

Hirose 12 Pin

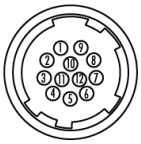

1	VIN –	(GND)	7	OUT 1	(open drain)
2	VIN +	(10 V to 25 V DC)	8	OUT 2	(open drain)
3	IN 4	(RXD RS232)	9	IN 3 +	(opto In +)
4	OUT 4	(TXD RS232)	10	IN 3 –	(opto In –)
5	IN 1	(0 - 24V)	11	OUT 3	(open drain)
6	IN 2	(0 - 24V)	12	OUT 0	(open drain)