Allied Vision

HR 100GigE

hr928M100GE



Preliminary product information. Features and technical specifications are subject to change without notice.

□□	
□□	hr928M100GE
□□□□	F004276
□□□□	HR 100GigE
□□	Coming soon

□□□	
□□□□□	Area scan
□□	Mono
□□	Visible
□□□□	400 nm to 1000 nm
□□□	8,256 × 8,256 (68.20 MP)
□□□□□	Sony IMX928
□□□□□ (□□)	cmos
□□□□	Global shutter (GS)
□□□□□	22.62 × 22.62 mm (31.99 mm, Type 2)
□□□□	2.74 µm × 2.74 µm

□□□□	
□□□□□	10-bit, 12-bit, 8-bit
□□□□□□	mono10, mono12, mono8

□□□□□	
□□□□□	138 fps
□□□□	8 µs to 60 s
□□	0.0 dB to 48.0 dB

preliminary

I/O □□□

□□□□	0 x LVDS input, 0 x LVDS output, 0 x TTL input, 0 x TTL output, 2 x 24V input, 2 x Open drain output,
□□□□□□	0 x RS232 input, 0 x RS232 output, 1 x RS422 input, 1 x RS422 output,
□□□□	0 x Optical isolated input, 0 x Optical isolated input,
I/O □□□	12-pin Hirose HR10A-10P-12S
□□□□	24 to 25VDC
□□	External: 30 W (typical)

□□□□

□□□□ (□□)	-10 °C to 60 °C

□□□□

□□□□ (□ x □ x □ mm)	93 × 62 × 62
□□□/□□□□	K9 - AR coating - 400-850nm
□□□□	IP30
□□□□	M58x0.75
□□	550 g

□□□□□□ FPGA

□□□□□ (RAM)	4032 MByte
□□□□□□□ (Flash)	32768 MByte

□□

□□□□	100gige
□□□□□	(QSFP28)
□□□□	GigE Vision 3.0

FW □□ – □□□□

□□□□	auto, external, manual
□□□□	auto, manual
□□□□□□	dpc, ffc, lut, mirror-image, roi, shading-correction

preliminary

□□□□

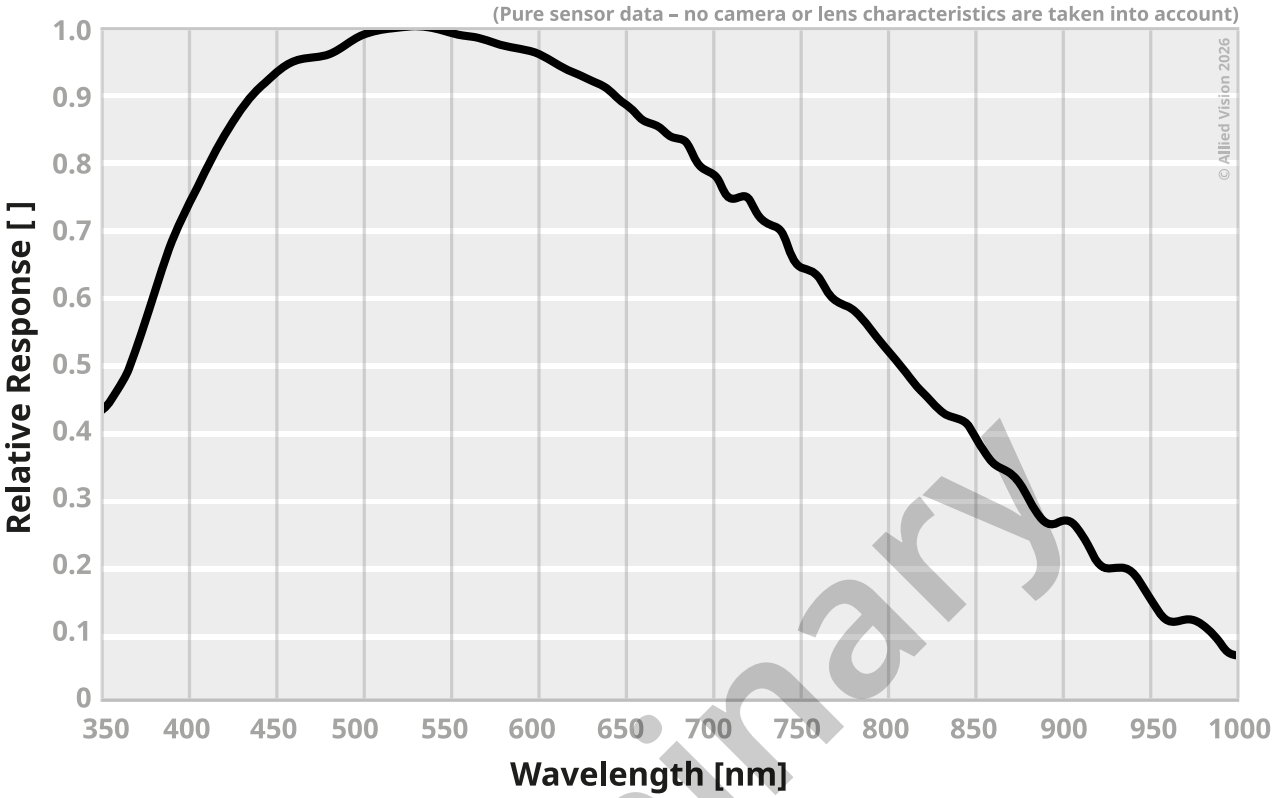

preliminary

□□□□

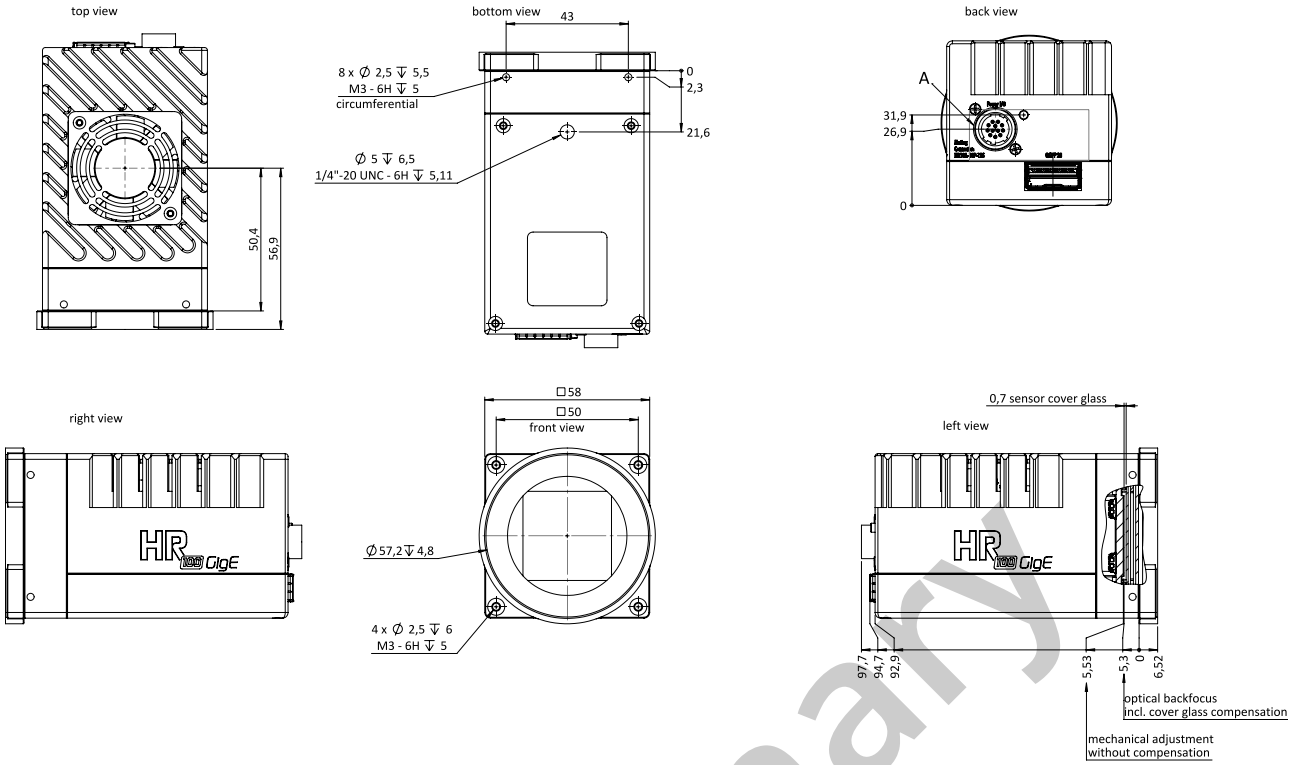

I/O □□□□

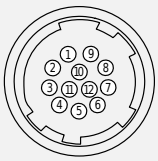

1	VIn- (GND)
2	VIn+ (24 V DC)
3	In 4 (RxD RS232)
4	Out 4 (TxD RS232)
5	In 1 (0 ... 24 V)
6	In 2 (0 ... 24 V)
7	Out 1 (open drain)
8	Out 2 (open drain)
9	In 3+(opto In+)
10	In 3-(opto In-)
11	Out 3 (open drain)
12	Out 0 (open drain)

preliminary