Allied Vision



Goldeye CL

Goldeye CL-033 SWIR TECless

The Goldeye CL-033 TECless high-speed camera is the fastest VGA resolution short wave infrared camera (SWIR) with Camera Link interface. Frame rates up to 301 fps at full resolution enable you to access versatile application fields and to speed up your processes. Thanks to its very affordable price, many cost-sensitive

□□	
□□	Goldeye CL-033 SWIR TECless
□□□□	Goldeye CL
□□	Available

□□□	
□□□□□	Area scan
□□	Mono
□□	SWIR
□□□□	900 nm to 1700 nm
□□□	640 × 512 (0.33 MP)
□□□□□	Progressive scan 0.33 MP
□□□□□ (□□)	cmos-ingaas
□□□□	Global shutter (GS)
□□□□□	9.6 × 7.68 mm (12.3 mm, Type 1)
□□□□	15.00 µm × 15.00 µm

□□□□	
□□□□□	14-bit

□□□□□	
□□□□□	301 fps
□□□□	1 µs to 200.00 ms
□□	0.0 dB to 33.0 dB

I/O □□□	
□□□□	LVTTL I/Os: 1 input, 1 output

I/O □□□

□□□□□□□	115 200 Baud, 8N1 (adjustable)
□□□□	1 Input, 2 Outputs
□□□□	10.8 V DC to 30.0 V
□□	6.0 W (at 12 VDC)

□□□□

□□□□	-20 °C to 55 °C (□□)

□□□□

□□□□ (□ x □ x □ mm)	78 × 55 × 55
□□	320 g

□□□□□□ FPGA

□□□□□ (RAM)	256 MByte

□□

□□□□	Camera Link Base

□□□□

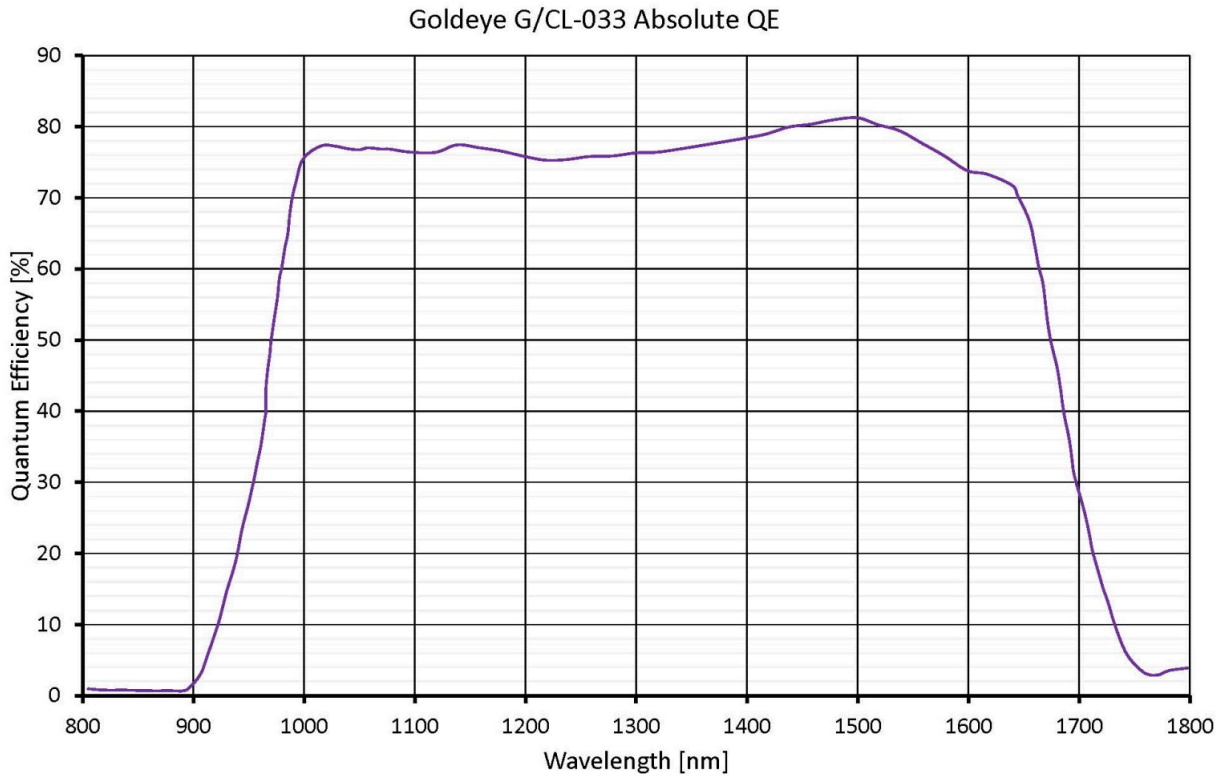
Goldeye G/CL-033 Absolute QE
Quantum Efficiency [%]
90
80
70
60
50
40
30
20
10
0
800
900
1000
1100
1200
1300
1400
1500
1600
1700
1800
Wavelength [nm]

□□□□

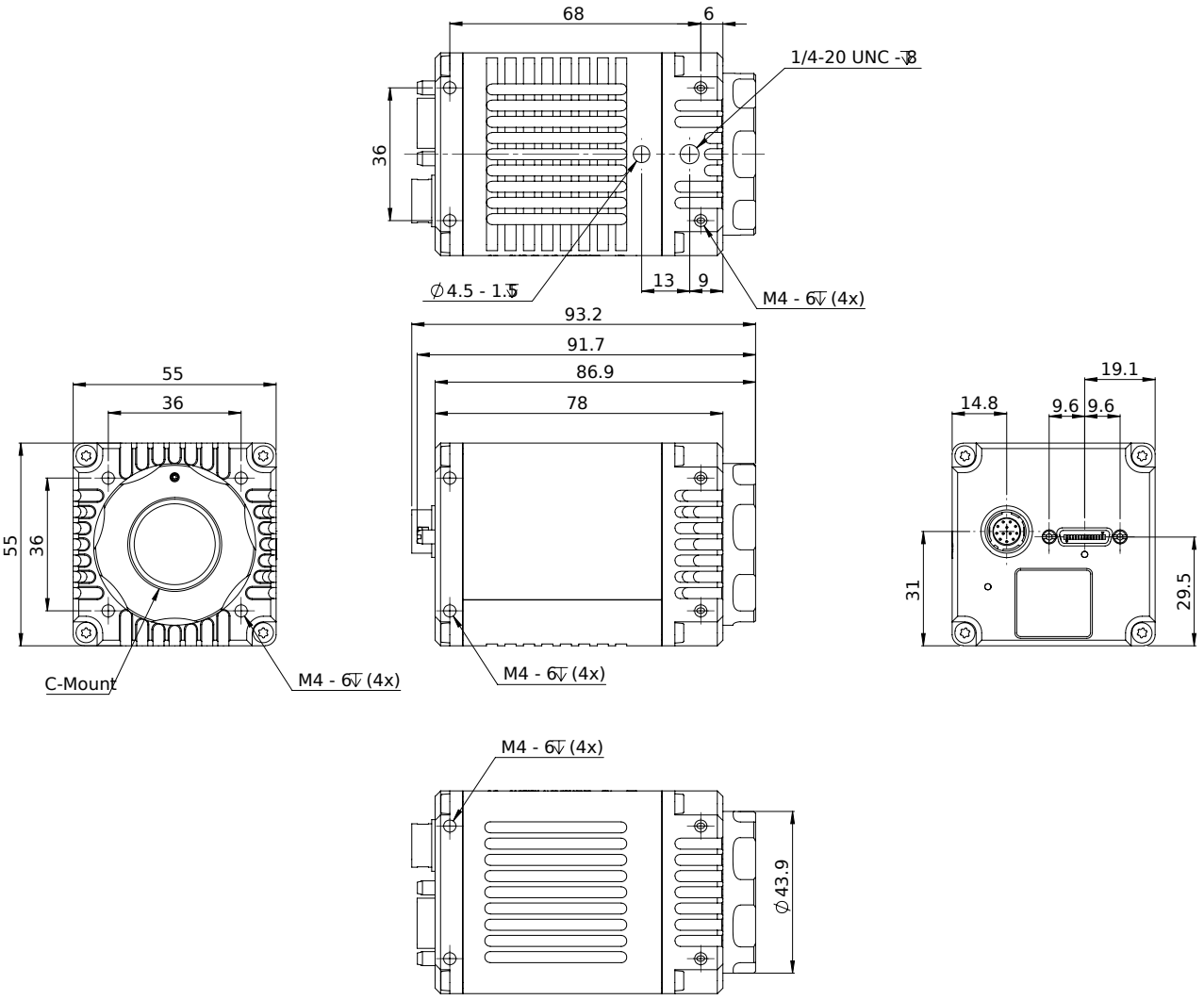
68
6
1/4-20 UNC - 8
36
∅4.5 - 1.5
13
9
M4 - 6 (4x)
93.2
91.7
86.9
78
55
36
55
36
C-Mount
M4 - 6 (4x)
M4 - 6 (4x)
19.1
14.8
9.6
9.6
31
29.5
M4 - 6 (4x)
∅43.9