Allied Vision



Goldeye CL

Goldeye CL-008 SWIR TEC1

The Goldeye CL-008 TEC1 is one of the fastest QVGA resolution short wave infrared cameras with Camera Link interface. With frame rates up to 344 fps at full resolution, versatile application fields can be addressed and processes can be sped up strongly. Thanks to its very affordable price, many cost-sensitive applica

□□	
□□	Goldeye CL-008 SWIR TEC1
□□□□	Goldeye CL
□□	Available

□□□	
□□□□□	Area scan
□□	Mono
□□	SWIR
□□□□	900 nm to 1700 nm
□□□	320 × 256 (0.08 MP)
□□□□□	Progressive scan 0.08 MP
□□□□□ (□□)	cmos-ingaas
□□□□	Global shutter (GS)
□□□□□	9.6 × 7.68 mm (12.3 mm, Type 1)
□□□□	30.00 µm × 30.00 µm

□□□□	
□□□□□	14-bit
□□□□□□	Tap geometry 1X 1Y: Mono8, Tap geometry 1X2 1Y: Mono8

□□□□□	
□□□□□	344 fps
□□□□	6 µs to 200.00 ms
□□	0.0 dB to 24.0 dB

I/O □□□

□□□□	LVTTL I/Os: 1 input, 1 output
□□□□□□	115 200 Baud, 8N1 (adjustable)
□□□□	1 input, 2 outputs
□□□□	10.8 V to 30.0 V
□□	10.5 W (at 12 VDC)

□□□□

□□□□	-20 °C to 55 °C (□□)

□□□□

□□□□ (□ x □ x □ mm)	78 × 55 × 55
□□	320 g

□□□□□□ FPGA

□□□□□ (RAM)	256 MByte

□□

□□□□	Camera Link Base

□□□□

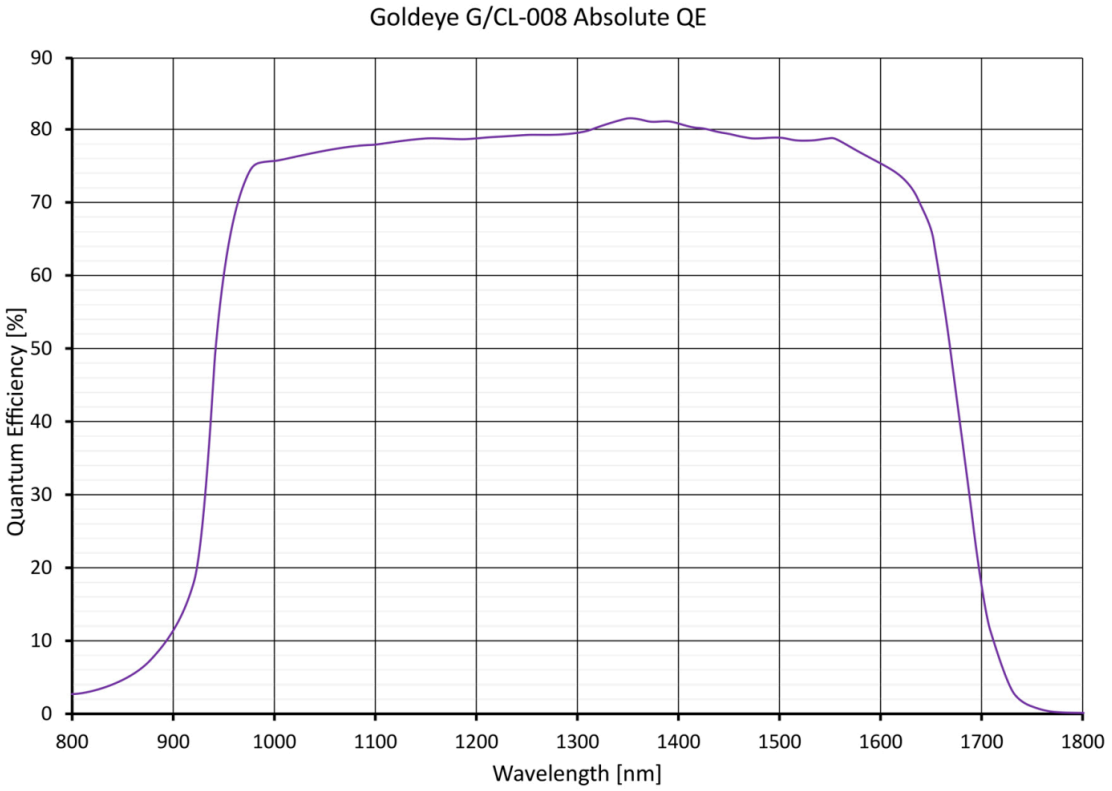
Goldeye G/CL-008 Absolute QE
Quantum Efficiency [%]
90
80
70
60
50
40
30
20
10
0
800
900
1000
1100
1200
1300
1400
1500
1600
1700
1800
Wavelength [nm]

□□□□

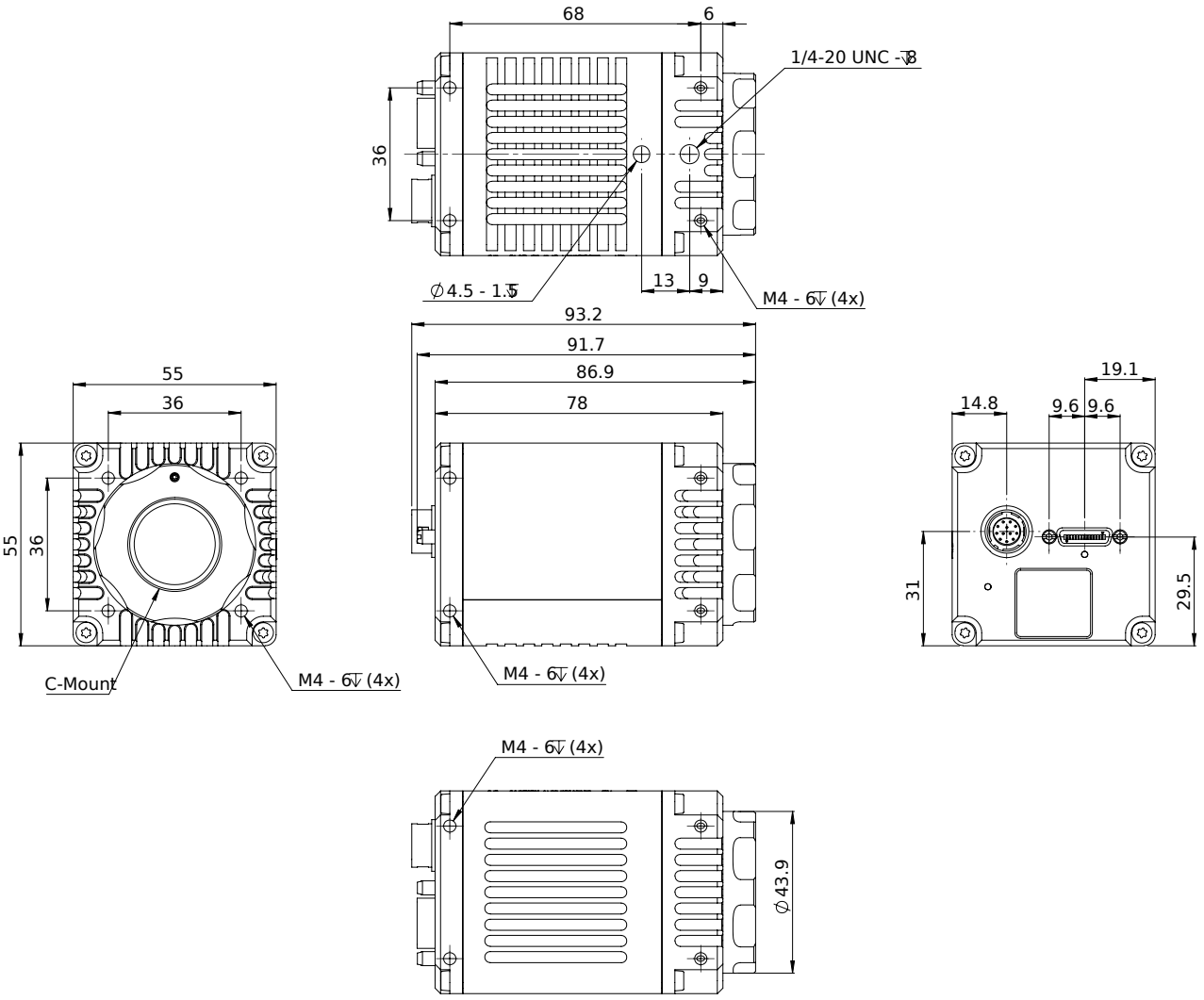
68
6
1/4-20 UNC - 8
36
∅4.5 - 1.5
13
9
M4 - 6 (4x)
93.2
91.7
86.9
78
55
36
55
36
C-Mount
M4 - 6 (4x)
M4 - 6 (4x)
19.1
14.8
9.6
9.6
31
29.5
M4 - 6 (4x)
∅43.9