FXO CoaXPress

fxo537CCX12-2C



□□	
□□	fxo537CCX12-2C
□□□□	F002255
□□□□	FXO CoaXPress
□□	Available

□□□	
□□□□□	Area scan
□□	Color
□□	Visible
□□□□	400 nm to 1000 nm
□□□	2,448 × 2,048 (5.00 MP)
□□□□□	Sony IMX537
□□□□□ (□□)	cmos
□□□□	Global shutter (GS)
□□□□□	6.71 × 5.61 mm (8.75 mm, Type 1/1.8)
□□□□	2.74 µm × 2.74 µm

□□□□	
□□□□□	12-bit, 8-bit
RGB □□□□	bayer12, bayer8

□□□□	
□□□□	72 dB
□□□	39 dB

Allied Vision

□□□□□

□□□□□	262 fps
□□□□	5 µs to 60 s
□□	0.0 dB to 48.0 dB

I/O □□□

□□□□	0 x LVDS input, 0 x LVDS output, 0 x TTL input, 0 x TTL output, 2 x 24V input, 4 x Open drain output,
□□□□□□	1 x RS232 input, 1 x RS232 output, 0 x RS422 input, 0 x RS422 output,
□□□□	1 x Optical isolated input, 0 x Optical isolated input,
I/O □□□	12-pin Hirose HR10A-10P-12S
□□□□	10 to 25VDC, Power over CoaXPress
□□	External: 13 W (typical)

□□□□

□□□□	-10 °C to 60 °C (□□)
Humidity	10 % to 90 % (non-condensing)

□□□□

□□□□ (□ x □ x □ mm)	73 × 50 × 50
□□□/□□□□	IR-Cut - 680nm
□□□□	IP30
□□□□	C-Mount
□□	240 g

□□□□□□ FPGA

□□□□□□□ (Flash)	32 MByte

□□

□□□□	cxp-12 with 2 connections
□□□□□	(micro-BNC)
□□□□	CoaXPress 2.0

FW □□ – □□□□

□□□□	auto, external, manual

FW □□ – □□□□

□□□□	auto, manual
□□□□□	auto, manual
□□□□□□	lut, mirror-image, roi

FW □□ – □□□□

□□□□/□□	external, internal, software

□□□□

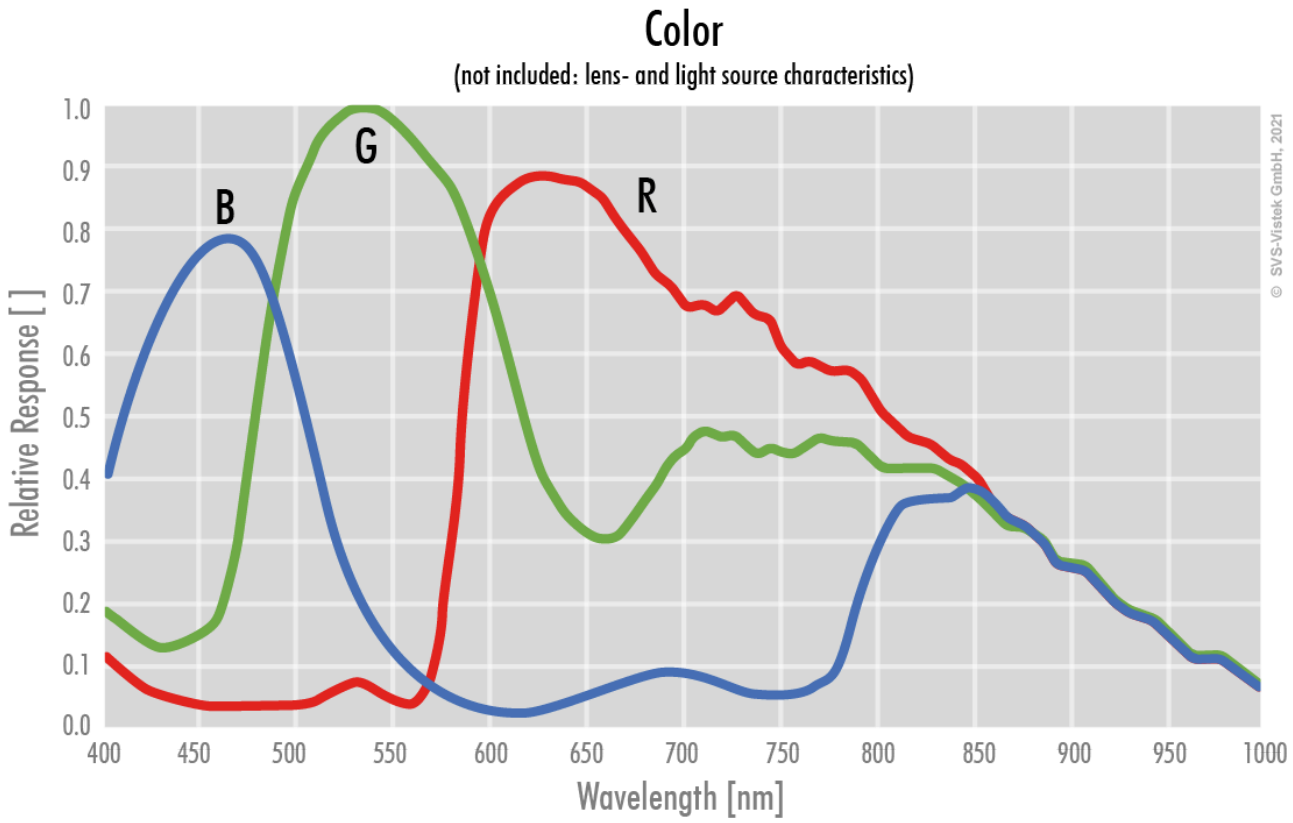
Color
(not included: lens- and light source characteristics)
Relative Response [ ]
Wavelength [nm]
B
G
R
1.0
0.9
0.8
0.7
0.6
0.5
0.4
0.3
0.2
0.1
0.0
400
450
500
550
600
650
700
750
800
850
900
950
1000
© SVS-Vistek GmbH, 2021

□□□□

back view

front view

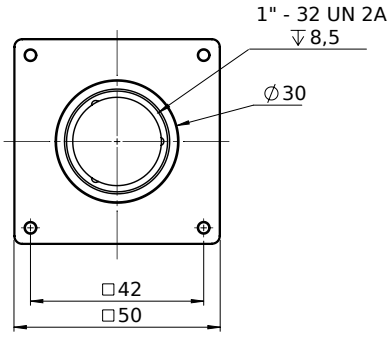

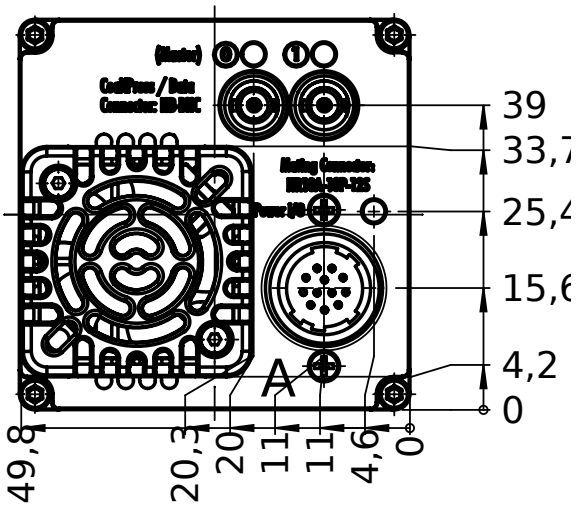

left view

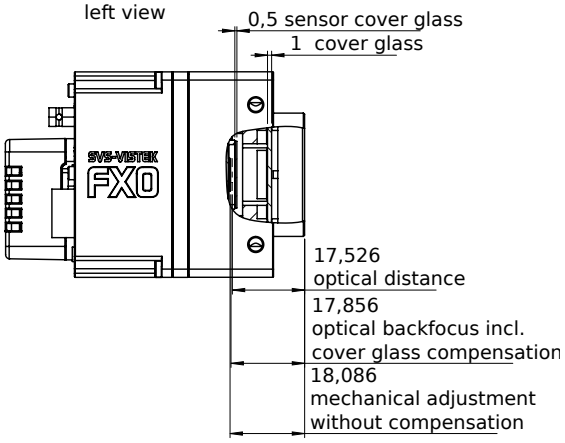

right view

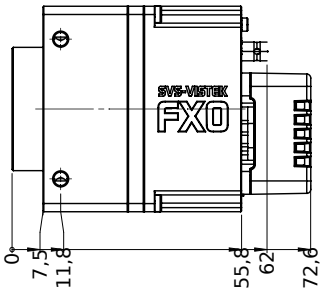

top view

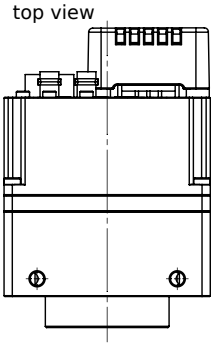

bottom view

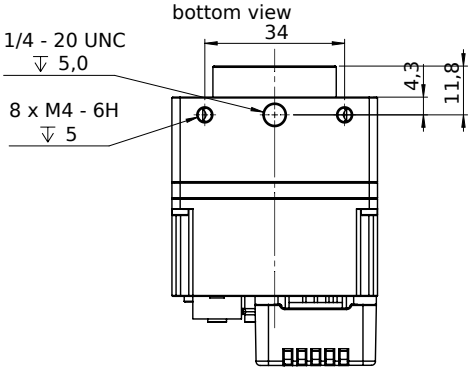

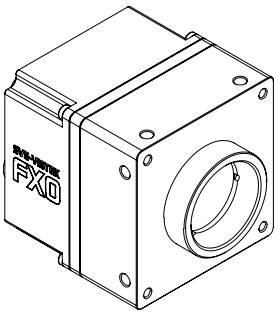

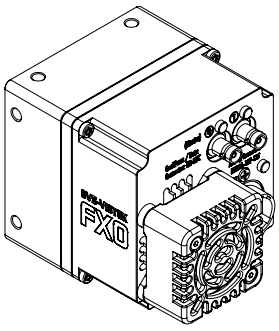

I/O □□□□

Hirose 12 Pin

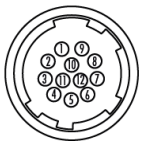

1	VIN –	(GND)	7	OUT 1	(open drain)
2	VIN +	(10 V to 25 V DC)	8	OUT 2	(open drain)
3	IN 4	(RXD RS232)	9	IN 3 +	(opto In +)
4	OUT 4	(TXD RS232)	10	IN 3 –	(opto In –)
5	IN 1	(0 - 24V)	11	OUT 3	(open drain)
6	IN 2	(0 - 24V)	12	OUT 0	(open drain)