# FXO CoaXPress

fxo547MCX



| □□ | |
|---|---|
| □□ | fxo547MCX |
| □□□□ | F002128 |
| □□□□ | FXO CoaXPress |
| □□ | Available |

| □□□ | |
|---|---|
| □□□□□ | Area scan |
| □□ | Mono |
| □□ | Visible |
| □□□□ | 400 nm to 1000 nm |
| □□□ | 2,448 × 2,048 (5.00 MP) |
| □□□□□ | Sony IMX547 |
| □□□□□ (□□) | cmos |
| □□□□ | Global shutter (GS) |
| □□□□□ | 6.71 × 5.61 mm (8.75 mm, Type 1/1.8) |
| □□□□ | 2.74 µm × 2.74 µm |

| □□□□ | |
|---|---|
| □□□□□ | 12-bit, 8-bit |
| □□□□□□ | mono12, mono8 |

| □□□□ | |
|---|---|
| □□□□ | 72 dB |
| □□□ | 39 dB |

## □□□□□

| | |
|---|---|
| □□□□□ | 124 fps |
| □□□□ | 7 µs to 60 s |
| □□ | 0.0 dB to 48.0 dB |

## I/O □□□

| | |
|---|---|
| □□□□ | 0 x LVDS input, 0 x LVDS output, 0 x TTL input, 0 x TTL output, 2 x 24V input, 4 x Open drain output, |
| □□□□□□ | 1 x RS232 input, 1 x RS232 output, 0 x RS422 input, 0 x RS422 output, |
| □□□□ | 1 x Optical isolated input, 0 x Optical isolated input, |
| I/O □□□ | 12-pin Hirose HR10A-10P-12S |
| □□□□ | 10 to 25VDC, Power over CoaXPress |
| □□ | External: 8 W (typical) |

## □□□□

| | |
|---|---|
| □□□□ | -10 °C to 65 °C (□□) |
| Humidity | 10 % to 90 % (non-condensing) |

## □□□□

| | |
|---|---|
| □□□□ (□ x □ x □ mm) | 70 × 50 × 50 |
| □□□/□□□□ | K9 - AR coating - 400-850nm |
| □□□□ | IP30 |
| □□□□ | C-Mount |
| □□ | 240 g |

## □□□□□□ FPGA

| | |
|---|---|
| □□□□□□□ (Flash) | 32 MByte |

## □□

| | |
|---|---|
| □□□□ | cxp-12 with 1 connection |
| □□□□□ | (micro-BNC) |
| □□□□ | CoaXPress 2.0 |

## FW □□ – □□□□

| | |
|---|---|
| □□□□ | auto, external, manual |

## FW □□ – □□□□

| | |
|---|---|
| □□□□ | auto, manual |
| □□□□□□ | dpc, ffc, lut, mirror-image, roi, shading-correction |

## FW □□ – □□□□

| | |
|---|---|
| □□□□/□□ | external, internal, software |

## □□□□

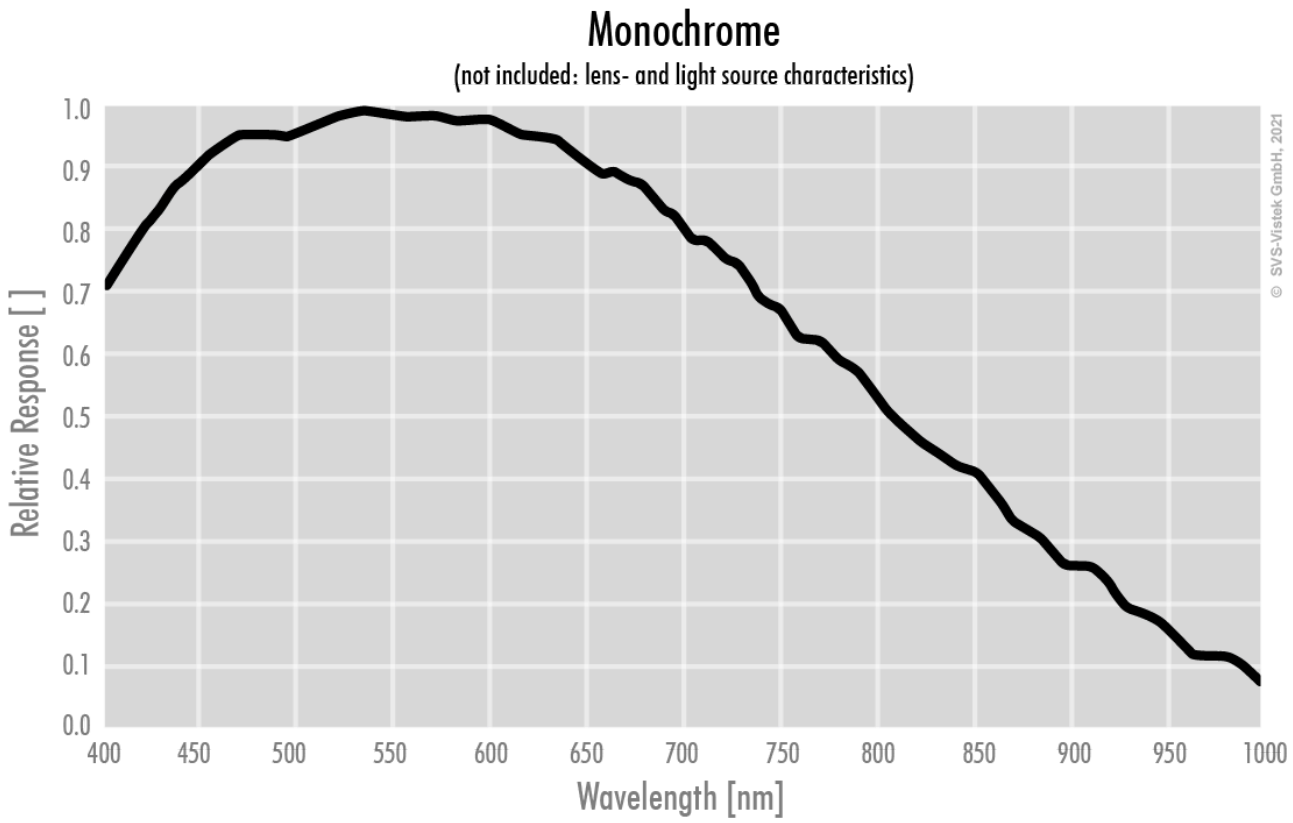
Monochrome
(not included: lens- and light source characteristics)
Relative Response [ ]
1.0
0.9
0.8
0.7
0.6
0.5
0.4
0.3
0.2
0.1
0.0
400
450
500
550
600
650
700
750
800
850
900
950
1000
Wavelength [nm]
© SVS-Vistek GmbH, 2021

## □□□□

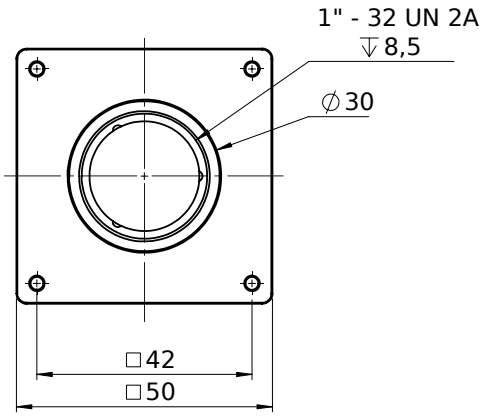
1" - 32 UN 2A
8,5
∅30
□42
□50

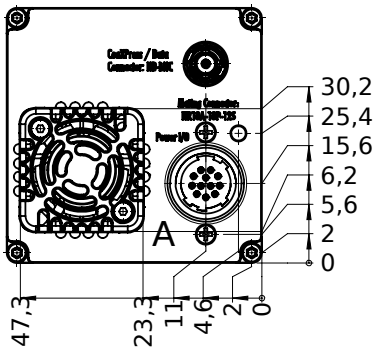
30,2
25,4
15,6
6,2
5,6
2
0
A
47,3
23,3
11
4,6
2
0

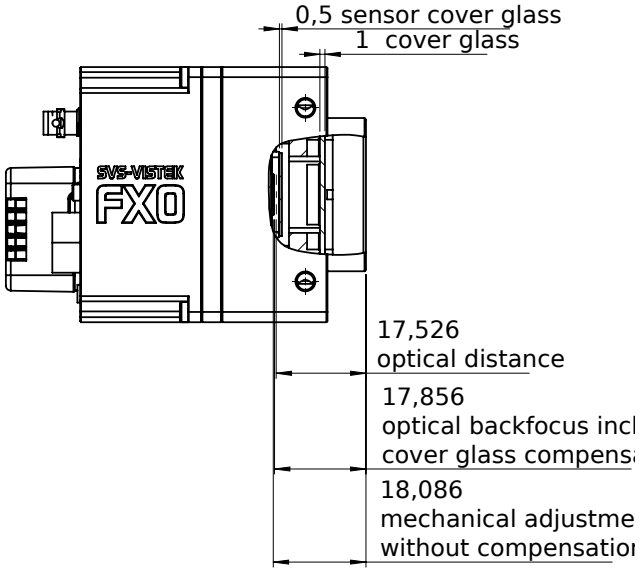
0,5 sensor cover glass
1 cover glass
SVS-VISTEK
FXO
17,526
optical distance
17,856
optical backfocus incl
cover glass compens
18,086
mechanical adjustme
without compensatio

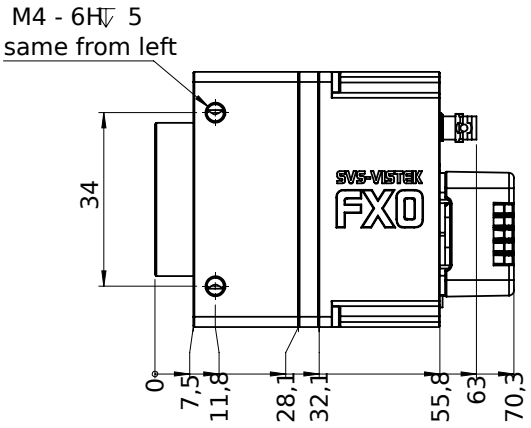
M4 - 6H 5
same from left
34
SVS-VISTEK
FXO
0
7,5
11,8
28,1
32,1
55,8
63
70,3

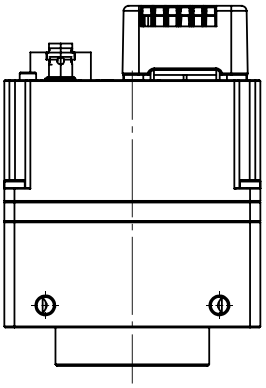

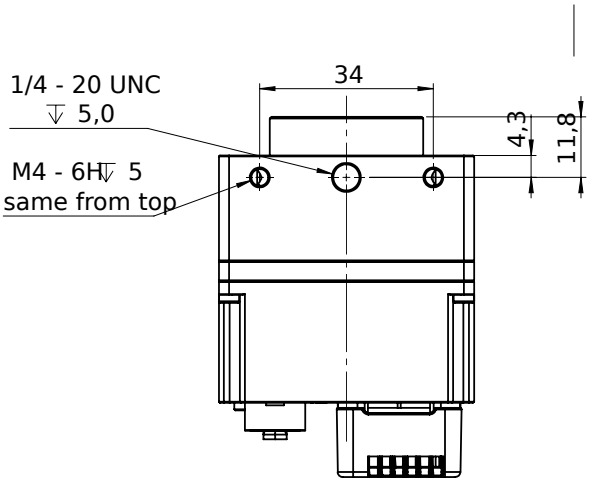


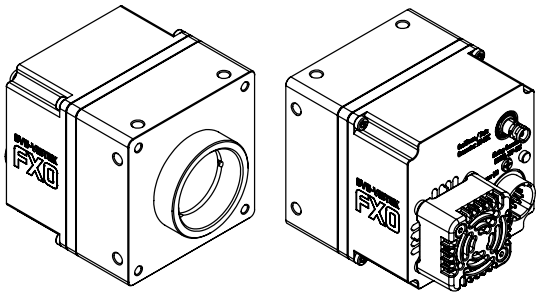

## I/O □□□□

Hirose 12 Pin

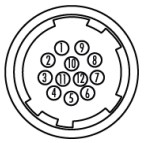

| | | | | | |
|---|---|---|---|---|---|
| 1 | VIN – | (GND) | 7 | OUT 1 | (open drain) |
| 2 | VIN + | (10 V to 25 V DC) | 8 | OUT 2 | (open drain) |
| 3 | IN 4 | (RXD RS232) | 9 | IN 3 + | (opto In + ) |
| 4 | OUT 4 | (TXD RS232) | 10 | IN 3 – | (opto In –) |
| 5 | IN 1 | (0 - 24V) | 11 | OUT 3 | (open drain) |
| 6 | IN 2 | (0 - 24V) | 12 | OUT 0 | (open drain) |