FXO 10GigE

fxo540CXGE



□□

□□	fxo540CXGE
□□□□	F002091
□□□□	FXO 10GigE
□□	Available

□□□

□□□□□	Area scan
□□	Color
□□	Visible
□□□□	400 nm to 1000 nm
□□□	5,320 × 4,600 (24.50 MP)
□□□□□	Sony IMX540
□□□□□ (□□)	cmos
□□□□	Global shutter (GS)
□□□□□	14.58 × 12.6 mm (19.27 mm, Type 1.2)
□□□□	2.74 µm × 2.74 µm

□□□□

□□□□□	12-bit, 8-bit
RGB □□□□	bayer12, bayer8

□□□□

□□□□	72 dB
□□□	39.12 dB

□□□□□

□□□□□	30.4 fps
□□□□	9 µs to 60 s
□□	0.0 dB to 48.0 dB

I/O □□□

□□□□	0 x LVDS input, 0 x LVDS output, 0 x TTL input, 0 x TTL output, 2 x 24V input, 4 x Open drain output,
□□□□□□	1 x RS232 input, 1 x RS232 output, 0 x RS422 input, 0 x RS422 output,
□□□□	1 x Optical isolated input, 0 x Optical isolated input,
I/O □□□	12-pin Hirose HR10A-10P-12S
□□□□	10 to 25VDC, Power over Ethernet
□□	External: 10 W (typical)

□□□□

□□□□	-10 °C to 60 °C (□□)
Humidity	10 % to 90 % (non-condensing)

□□□□

□□□□ (□ x □ x □ mm)	76 × 50 × 50
□□□/□□□□	IR-Cut - 680nm
□□□□	IP30
□□□□	C-Mount
□□	240 g

□□□□□□ FPGA

□□□□□ (RAM)	896 MByte
□□□□□□□ (Flash)	32 MByte

□□

□□□□	10gige
□□□□□	(RJ-45)
□□□□	GigE Vision 2.0

FW □□ – □□□□

□□□□	auto, external, manual
□□□□	auto, manual
□□□□□	auto, manual
□□□□□□	color-transformation, lut, mirror-image, roi

FW □□ – □□□□

□□□□/□□	external, internal, software

□□□□

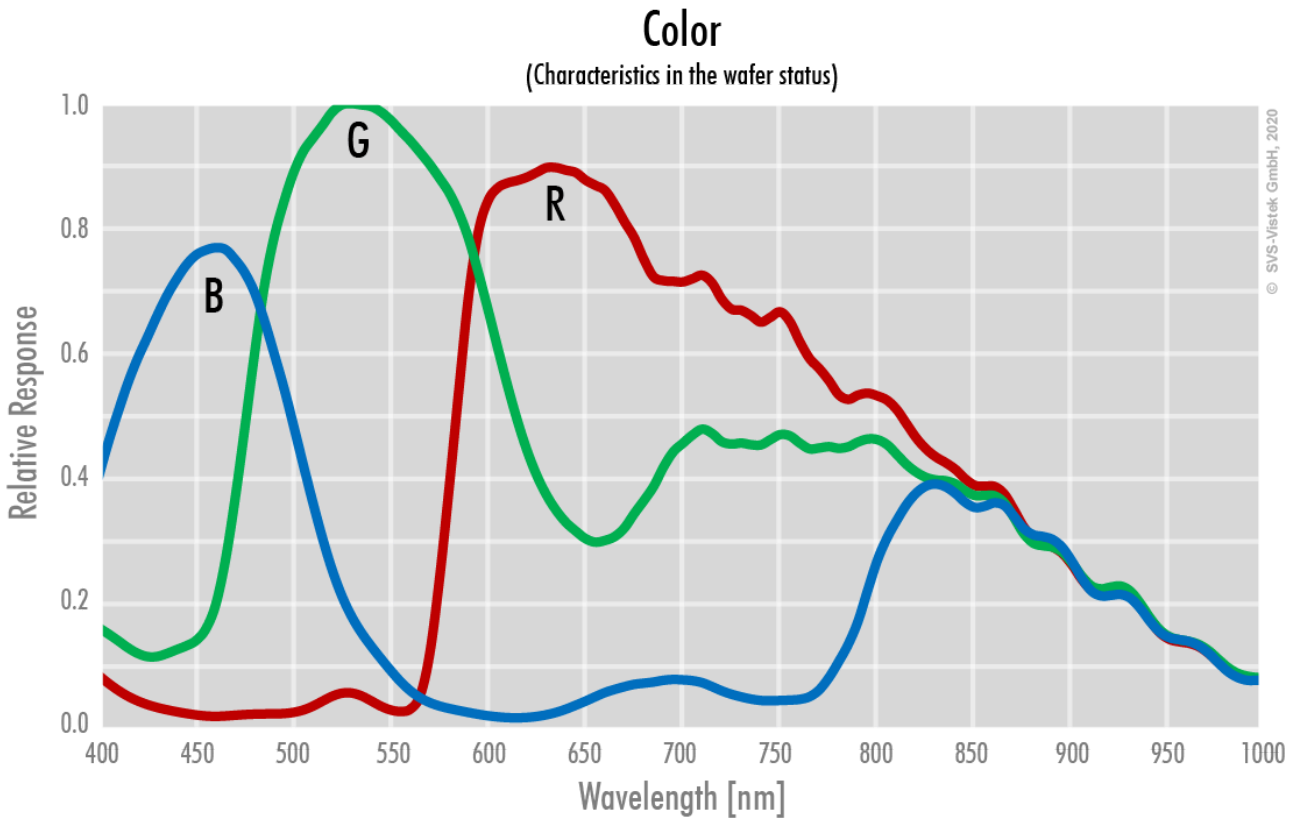
Color
(Characteristics in the wafer status)
Relative Response
1.0
0.8
0.6
0.4
0.2
0.0
400
450
500
550
600
650
700
750
800
850
900
950
1000
Wavelength [nm]
B
G
R
© SVS-Vistek GmbH, 2020

□□□□

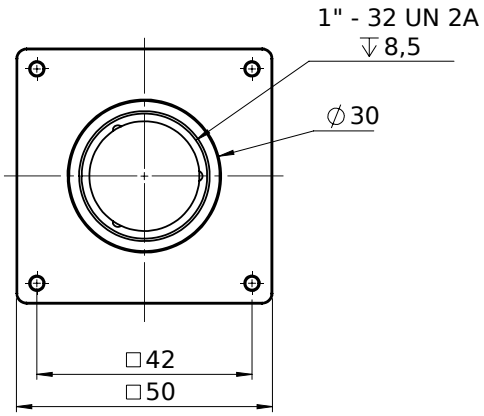
1" - 32 UN 2A
↧8,5
⌀30
□42
□50

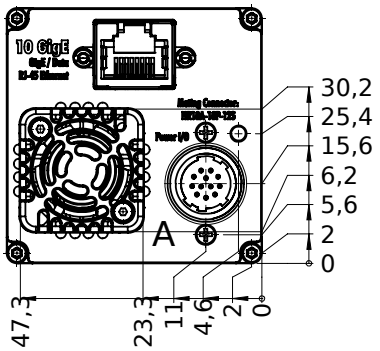
10 GigE
A
30,2
25,4
15,6
6,2
5,6
2
0
47,3
23,3
11
4,6
2
0

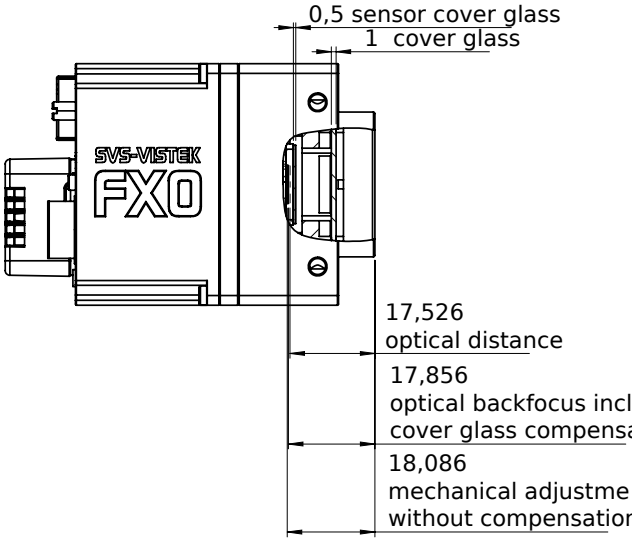
0,5 sensor cover glass
1 cover glass
SVS-VISTEK
FX0
17,526
optical distance
17,856
optical backfocus incl
cover glass compensa
18,086
mechanical adjustme
without compensatior

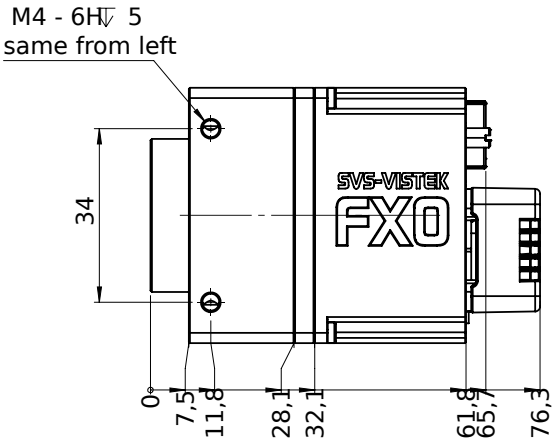
M4 - 6H↧ 5
same from left
34
SVS-VISTEK
FX0
0
7,5
11,8
28,1
32,1
61,9
65,7
76,3

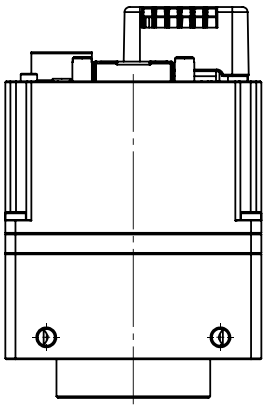

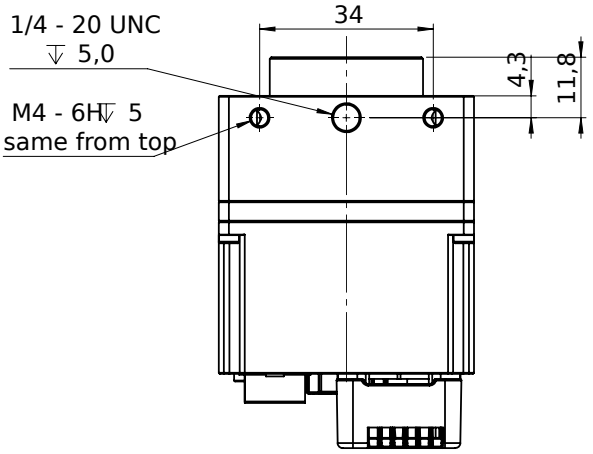

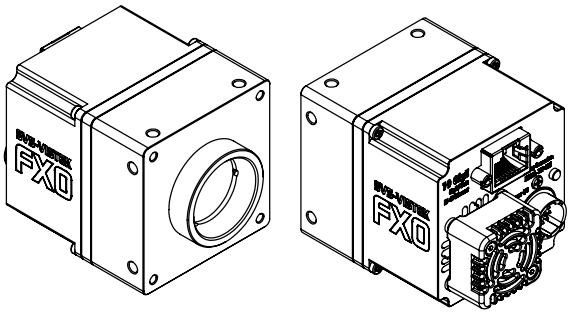

I/O □□□□

Hirose 12 Pin

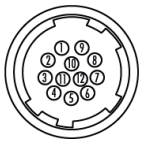

1	VIN –	(GND)	7	OUT 1	(open drain)
2	VIN +	(10 V to 25 V DC)	8	OUT 2	(open drain)
3	IN 4	(RXD RS232)	9	IN 3 +	(opto In +)
4	OUT 4	(TXD RS232)	10	IN 3 –	(opto In –)
5	IN 1	(0 - 24V)	11	OUT 3	(open drain)
6	IN 2	(0 - 24V)	12	OUT 0	(open drain)