Allied Vision

EXO USB3

exo902CU3



□□	
□□	exo902CU3
□□□□	F002405
□□□□	EXO USB3
□□	Available

□□□	
□□□□□	Area scan
□□	Color
□□	Visible
□□□□	400 nm to 1000 nm
□□□	6,048 × 2,048 (12.40 MP)
□□□□□	Sony IMX902
□□□□□ (□□)	cmos
□□□□	Global shutter (GS)
□□□□□	16.57 × 5.61 mm (17.5 mm, Type 1.1)
□□□□	2.74 µm × 2.74 µm

□□□□	
□□□□□	8-bit, 12-bit
RGB □□□□	bayer8, bayer12packed

□□□□□	
□□□□□	29.6 fps
□□□□	19 µs to 60 s
□□	0.0 dB to 48.0 dB

I/O □□□

□□□□	0 x LVDS input, 0 x LVDS output, 0 x TTL input, 0 x TTL output, 2 x 24V input, 4 x Open drain output,
□□□□□□	1 x RS232 input, 1 x RS232 output, 0 x RS422 input, 0 x RS422 output,
□□□□	1 x Optical isolated input, 0 x Optical isolated input,
I/O □□□	12-pin Hirose HR10A-10P-12S
□□□□	10 to 25VDC
□□	External: 5 W (typical)

□□□□

□□□□	-10 °C to 65 °C (□□)

□□□□

□□□□ (□ x □ x □ mm)	43 × 50 × 50
□□□/□□□□	None
□□□□	IP40
□□□□	C-Mount
□□	140 g

□□□□□□ FPGA

□□□□□ (RAM)	192 MByte
□□□□□□□ (Flash)	32 MByte

□□

□□□□	usb3.0
□□□□□	(Micro-B)
□□□□	USB3 Vision

FW □□ – □□□□

□□□□	manual, auto, external
□□□□	auto, manual
□□□□□	auto, manual
□□□□□□	roi, lut, mirror-image, dpc, shading-correction

FW □□ – □□□□

□□□□/□□	internal, software, external
□□□□□□	User Sets, PWM(4), Sequencer,

□□□□

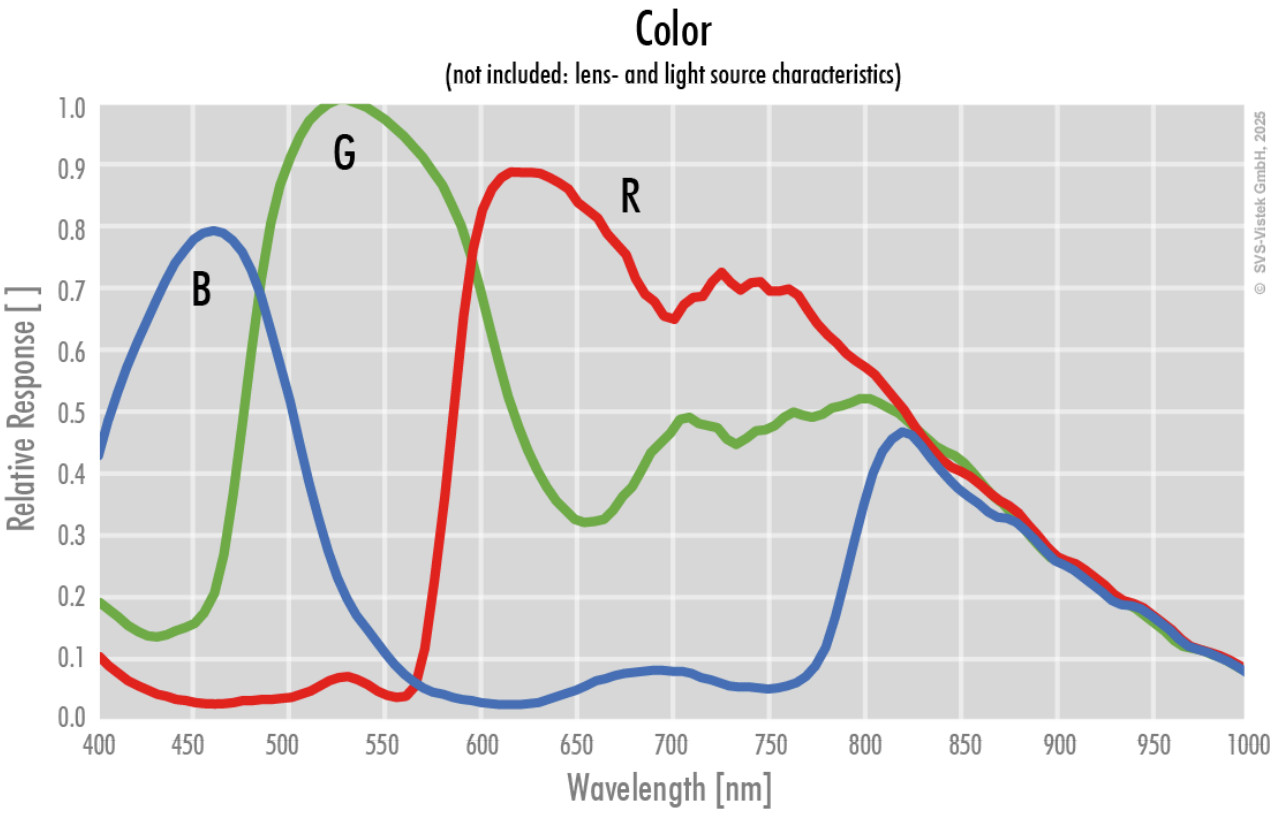
Color
(not included: lens- and light source characteristics)
Relative Response [ ]
1.0
0.9
0.8
0.7
0.6
0.5
0.4
0.3
0.2
0.1
0.0
400
450
500
550
600
650
700
750
800
850
900
950
1000
Wavelength [nm]
B
G
R
© SVS-Vistek GmbH, 2025

□□□□

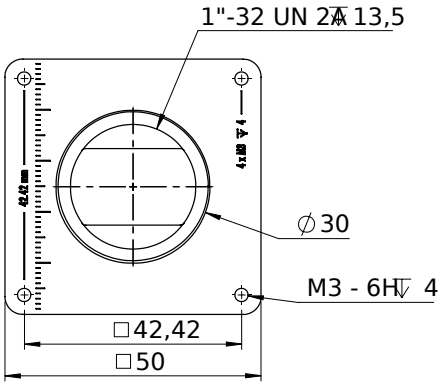
1"-32 UN 2A ↧13,5
∅30
M3 - 6H ↧ 4
□42,42
□50

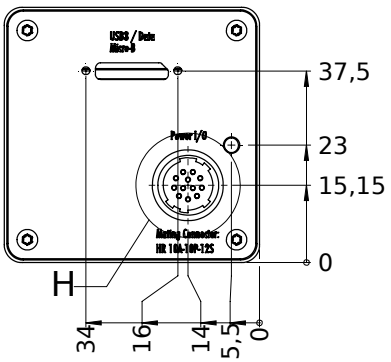
37,5
23
15,15
0
34
16
14
5,5
0

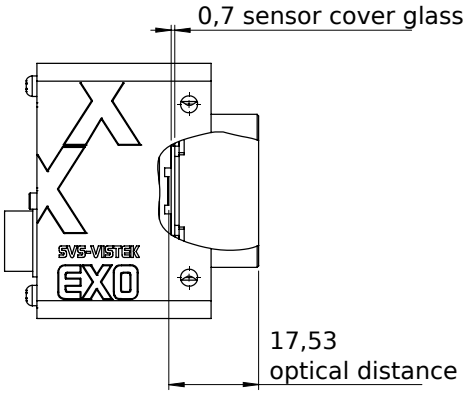
0,7 sensor cover glass
17,53
optical distance
SVS-VISTEK
EXO

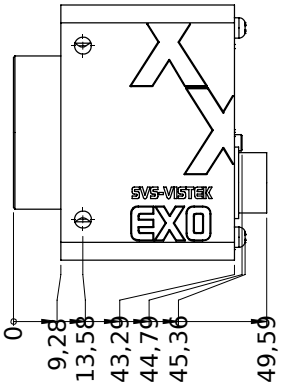
SVS-VISTEK
EXO
0
9,28
13,58
43,29
44,79
45,36
49,59

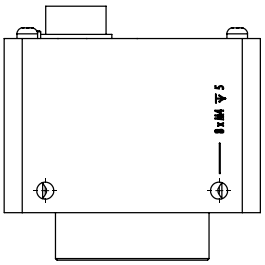

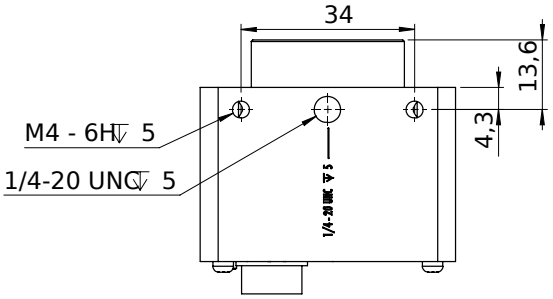

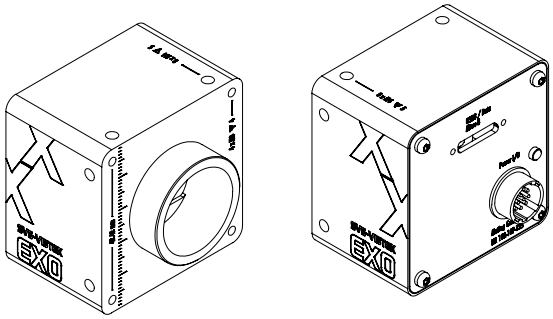

I/O □□□□

Hirose 12 Pin

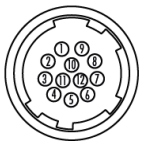

1	VIN –	(GND)	7	OUT 1	(open drain)
2	VIN +	(10 V to 25 V DC)	8	OUT 2	(open drain)
3	IN 4	(RXD RS232)	9	IN 3 +	(opto In +)
4	OUT 4	(TXD RS232)	10	IN 3 –	(opto In –)
5	IN 1	(0 - 24V)	11	OUT 3	(open drain)
6	IN 2	(0 - 24V)	12	OUT 0	(open drain)