# EXO USB3

## exo342CU3



| □□ | |
|---|---|
| □□ | exo342CU3 |
| □□□□ | F001967 |
| □□□□ | EXO USB3 |
| □□ | Available |

| □□□ | |
|---|---|
| □□□□□ | Area scan |
| □□ | Color |
| □□ | Visible |
| □□□□ | 400 nm to 1000 nm |
| □□□ | 6,464 × 4,852 (31.40 MP) |
| □□□□□ | Sony IMX342 |
| □□□□□ (□□) | cmos |
| □□□□ | Global shutter (GS) |
| □□□□□ | 22.3 × 16.74 mm (27.88 mm, Type APS-C) |
| □□□□ | 3.45 µm × 3.45 µm |

| □□□□ | |
|---|---|
| □□□□□ | 8-bit, 12-bit |
| RGB □□□□ | bayer8, bayer12packed |

| □□□□ | |
|---|---|
| □□□□ | 70.5 dB |
| □□□ | 39.9 dB |

## □□□□□

| | |
|---|---|
| □□□□□ | 12 fps |
| □□□□ | 47 µs to 60 s |
| □□ | 0.0 dB to 48.0 dB |

## I/O □□□

| | |
|---|---|
| □□□□ | 0 x LVDS input, 0 x LVDS output, 0 x TTL input, 0 x TTL output, 2 x 24V input, 4 x Open drain output, |
| □□□□□□ | 1 x RS232 input, 1 x RS232 output, 0 x RS422 input, 0 x RS422 output, |
| □□□□ | 1 x Optical isolated input, 0 x Optical isolated input, |
| I/O □□□ | 12-pin Hirose HR10A-10P-12S |
| □□□□ | 10 to 25VDC |
| □□ | External: 6 W (typical) |

## □□□□

| | |
|---|---|
| □□□□ | -10 °C to 65 °C (□□) |

## □□□□

| | |
|---|---|
| □□□□ (□ x □ x □ mm) | 46 × 58 × 58 |
| □□□/□□□□ | K9 - AR coating |
| □□□□ | IP40 |
| □□□□ | M42 |
| □□ | 320 g |

## □□□□□□ FPGA

| | |
|---|---|
| □□□□□ (RAM) | 192 MByte |
| □□□□□□□ (Flash) | 32 MByte |

## □□

| | |
|---|---|
| □□□□ | usb3.0 |
| □□□□□ | (Micro-B) |
| □□□□ | USB3 Vision |

## FW □□ – □□□□

| | |
|---|---|
| □□□□ | manual, auto, external |

| FW □□ – □□□□ | |
|---|---|
| □□□□ | auto, manual |
| □□□□□ | auto, manual |
| □□□□□□ | roi, lut, mirror-image, dpc, shading-correction |

| FW □□ – □□□□ | |
|---|---|
| □□□□/□□ | internal, software, external |
| □□□□□□ | User Sets, PWM(4), Sequencer, |

## □□□□

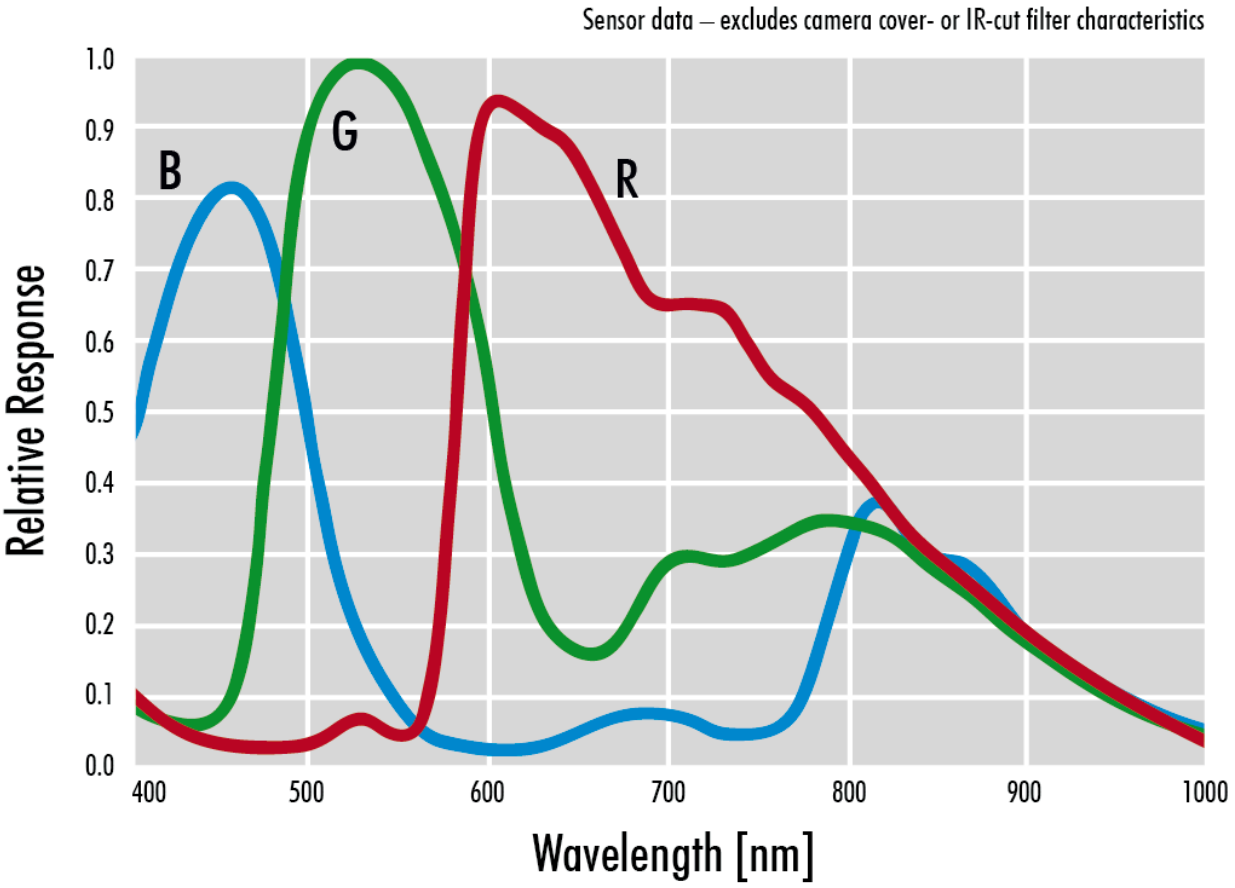
Sensor data – excludes camera cover- or IR-cut filter characteristics
Relative Response
1.0
0.9
0.8
0.7
0.6
0.5
0.4
0.3
0.2
0.1
0.0
B
G
R
400
500
600
700
800
900
1000
Wavelength [nm]

## □□□□

### front

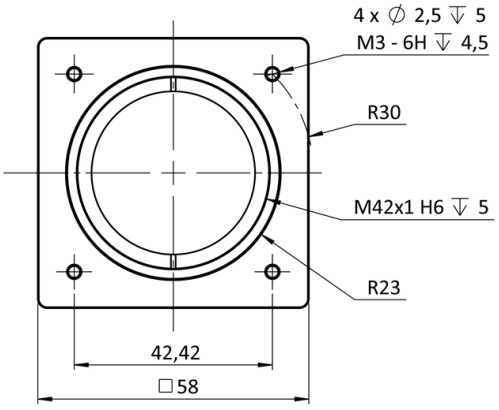


### back

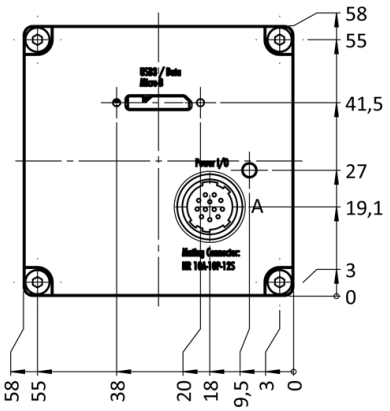


### cross section

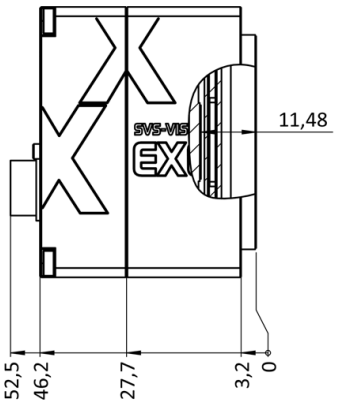


### right side



## top

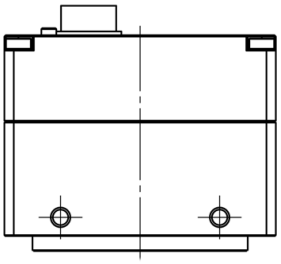

## bottom

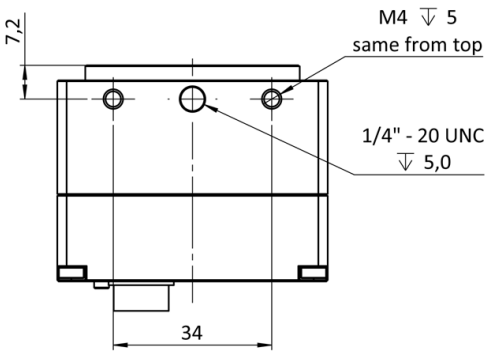


## 3D

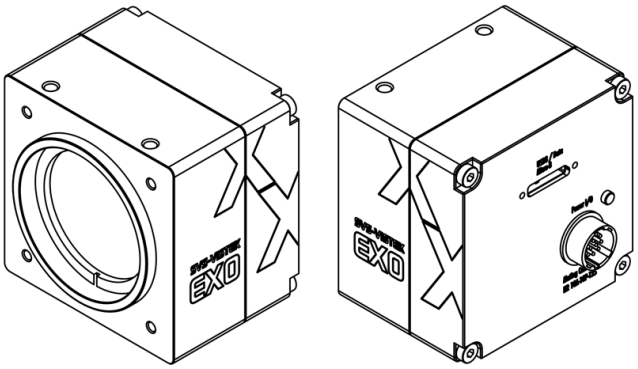

## I/O □□□□

Hirose 12 Pin

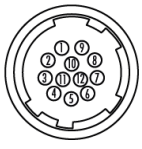

| | | | | | |
|---|---|---|---|---|---|
| 1 | VIN – | (GND) | 7 | OUT 1 | (open drain) |
| 2 | VIN + | (10 V to 25 V DC) | 8 | OUT 2 | (open drain) |
| 3 | IN 4 | (RXD RS232) | 9 | IN 3 + | (opto In + ) |
| 4 | OUT 4 | (TXD RS232) | 10 | IN 3 – | (opto In –) |
| 5 | IN 1 | (0 - 24V) | 11 | OUT 3 | (open drain) |
| 6 | IN 2 | (0 - 24V) | 12 | OUT 0 | (open drain) |