# EXO USB3

## exo174MU3



| □□ | |
|---|---|
| □□ | exo174MU3 |
| □□□□ | F001629 |
| □□□□ | EXO USB3 |
| □□ | Discontinued |

| □□□ | |
|---|---|
| □□□□□ | Area scan |
| □□ | Mono |
| □□ | Visible |
| □□□□ | 400 nm to 1000 nm |
| □□□ | 1,920 × 1,200 (2.30 MP) |
| □□□□□ | Sony IMX174 |
| □□□□□ (□□) | cmos |
| □□□□ | Global shutter (GS) |
| □□□□□ | 11.25 × 7.03 mm (13.27 mm, Type 1/1.2) |
| □□□□ | 5.86 µm × 5.86 µm |

| □□□□ | |
|---|---|
| □□□□□ | 8-bit, 12-bit |
| □□□□□□ | mono8, mono12packed |

| □□□□ | |
|---|---|
| □□□□ | 72 dB |
| □□□ | 44 dB |

## □□□□□

| | |
|---|---|
| □□□□□ | 160 fps |
| □□□□ | 19 µs to 60 s |
| □□ | 0.0 dB to 18.0 dB |

## I/O □□□

| | |
|---|---|
| □□□□ | 0 x LVDS input, 0 x LVDS output, 0 x TTL input, 0 x TTL output, 2 x 24V input, 4 x Open drain output, |
| □□□□□□ | 1 x RS232 input, 1 x RS232 output, 0 x RS422 input, 0 x RS422 output, |
| □□□□ | 1 x Optical isolated input, 0 x Optical isolated input, |
| I/O □□□ | 12-pin Hirose HR10A-10P-12S |
| □□□□ | 10 to 25VDC |
| □□ | External: 4.5 W (typical) |

## □□□□

| | |
|---|---|
| □□□□ | -10 °C to 60 °C (□□) |

## □□□□

| | |
|---|---|
| □□□□ (□ x □ x □ mm) | 43 × 50 × 50 |
| □□□/□□□□ | K9 - AR coating - 400-850nm |
| □□□□ | IP40 |
| □□□□ | C-Mount |
| □□ | 140 g |

## □□□□□□ FPGA

| | |
|---|---|
| □□□□□ (RAM) | 192 MByte |
| □□□□□□□ (Flash) | 32 MByte |

## □□

| | |
|---|---|
| □□□□ | usb3.0 |
| □□□□□ | (Micro-B) |
| □□□□ | USB3 Vision |

## FW □□ – □□□□

| | |
|---|---|
| □□□□ | manual, auto, external |

## FW □□ – □□□□

| | |
|---|---|
| □□□□ | auto, manual |
| □□□□□□ | roi, lut, mirror-image, dpc, shading-correction |

## FW □□ – □□□□

| | |
|---|---|
| □□□□/□□ | internal, software, external |
| □□□□□□ | User Sets, PWM(4), Sequencer, |

## □□□□

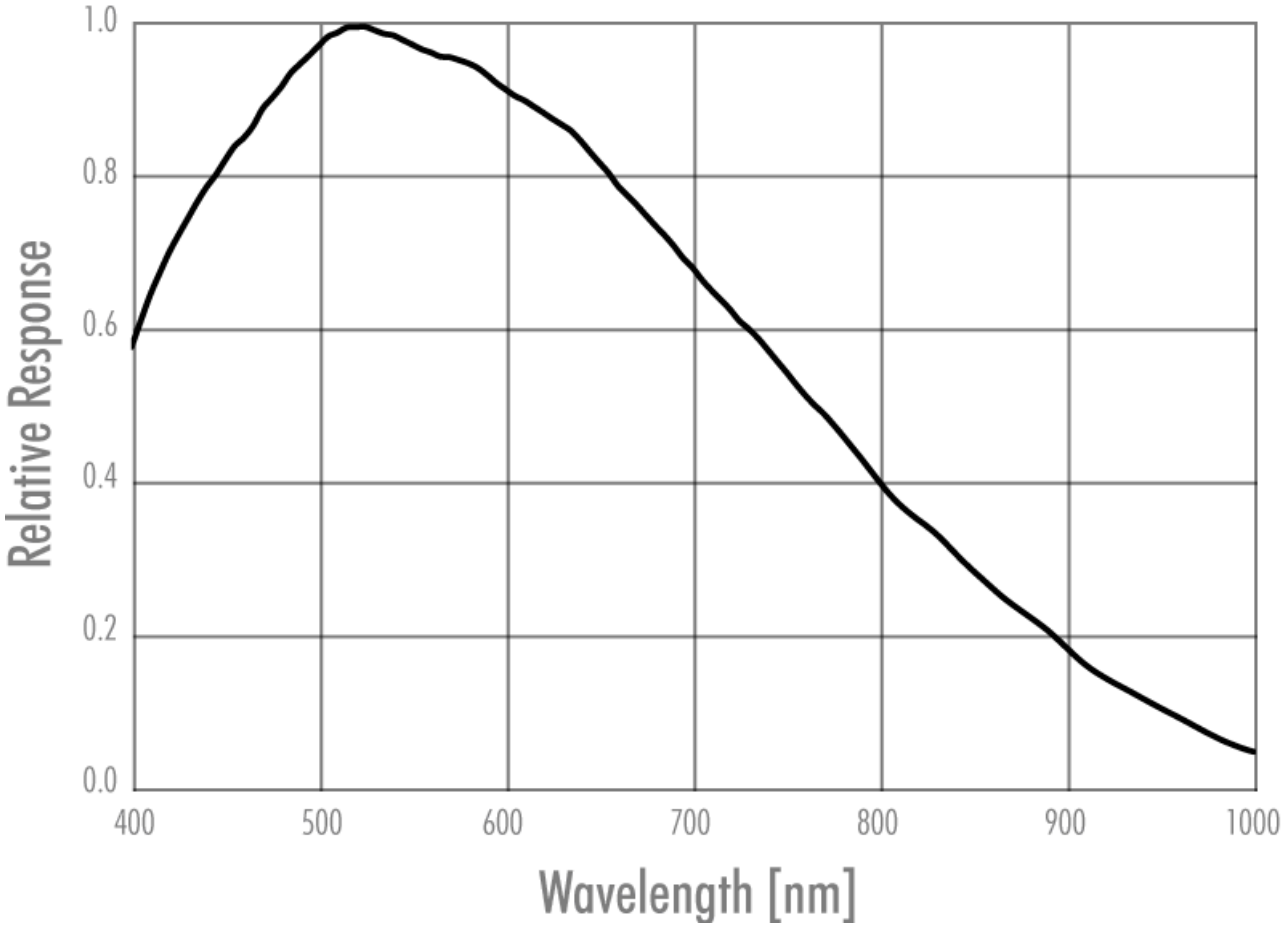
1.0
0.8
0.6
0.4
0.2
0.0
Relative Response
400
500
600
700
800
900
1000
Wavelength [nm]

## □□□□

### front

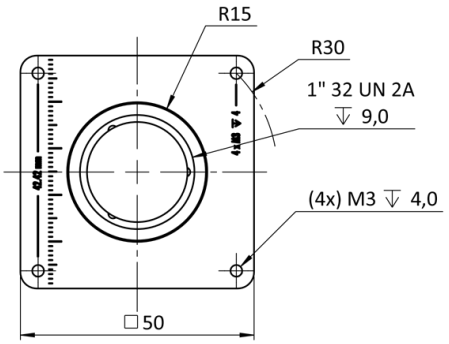


### back

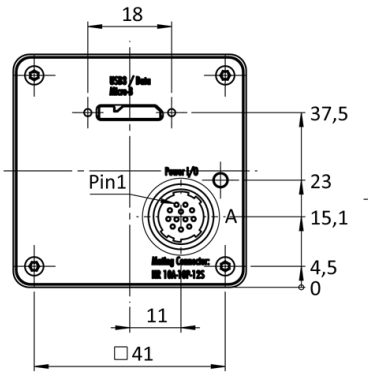


### cross section

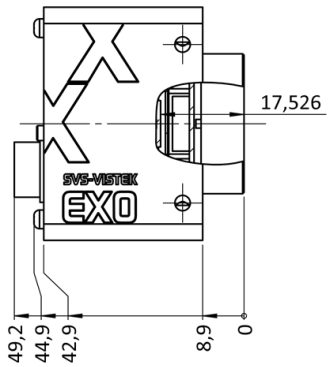


### right side

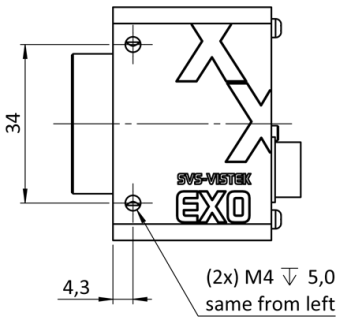

top

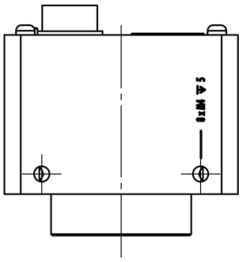

bottom

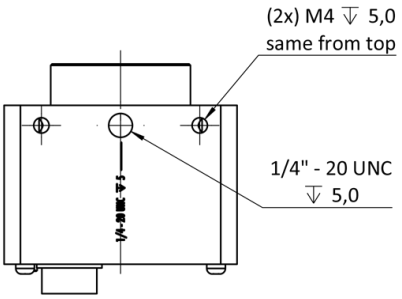


3D

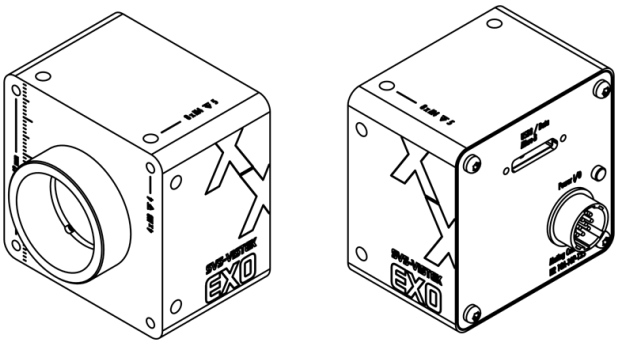

## I/O □□□□

Hirose 12 Pin

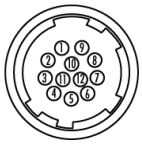

| | | | | | |
|---|---|---|---|---|---|
| 1 | VIN – | (GND) | 7 | OUT 1 | (open drain) |
| 2 | VIN + | (10 V to 25 V DC) | 8 | OUT 2 | (open drain) |
| 3 | IN 4 | (RXD RS232) | 9 | IN 3 + | (opto In +) |
| 4 | OUT 4 | (TXD RS232) | 10 | IN 3 – | (opto In –) |
| 5 | IN 1 | (0 - 24V) | 11 | OUT 3 | (open drain) |
| 6 | IN 2 | (0 - 24V) | 12 | OUT 0 | (open drain) |