EXO Camera Link

exo183MCL



□□	
□□	exo183MCL
□□□□	F001900
□□□□	EXO Camera Link
□□	Discontinued

□□□	
□□□□□	Area scan
□□	Mono
□□	Visible
□□□□	400 nm to 1000 nm
□□□	5,488 × 3,672 (20.20 MP)
□□□□□	Sony IMX183
□□□□□ (□□)	cmos
□□□□	Rolling shutter (RS)
□□□□□	13.17 × 8.81 mm (15.85 mm, Type 1)
□□□□	2.40 µm × 2.40 µm

□□□□	
□□□□□	8-bit, 12-bit
□□□□□□	mono8, mono12

□□□□	
□□□□	71.5 dB
□□□	40 dB

□□□□□

□□□□□	12 fps
□□□□	228 µs to 60 s
□□	0.0 dB to 27.0 dB

I/O □□□

□□□□	0 x LVDS input, 0 x LVDS output, 0 x TTL input, 0 x TTL output, 2 x 24V input, 4 x Open drain output,
□□□□□□	1 x RS232 input, 1 x RS232 output, 0 x RS422 input, 0 x RS422 output,
□□□□	1 x Optical isolated input, 0 x Optical isolated input,
I/O □□□	12-pin Hirose HR10A-10P-12S
□□□□	10 to 25VDC
□□	External: 4 W (typical)

□□□□

□□□□	-10 °C to 60 °C (□□)

□□□□

□□□□ (□ x □ x □ mm)	43 × 50 × 50
□□□/□□□□	K9 - AR coating - 400-850nm
□□□□	IP40
□□□□	C-Mount
□□	140 g

□□□□□□ FPGA

□□□□□ (RAM)	192 MByte
□□□□□□□ (Flash)	32 MByte

□□

□□□□	Camera Link Base
□□□□□	(MDR)

FW □□ – □□□□

□□□□	manual, auto
□□□□	auto, manual

FW □□ – □□□□

□□□□□□□	roi, lut, mirror-image

FW □□ – □□□□

□□□□/□□	internal, software, external
□□□□□□□	User Sets, PWM(4), Sequencer,

□□□□

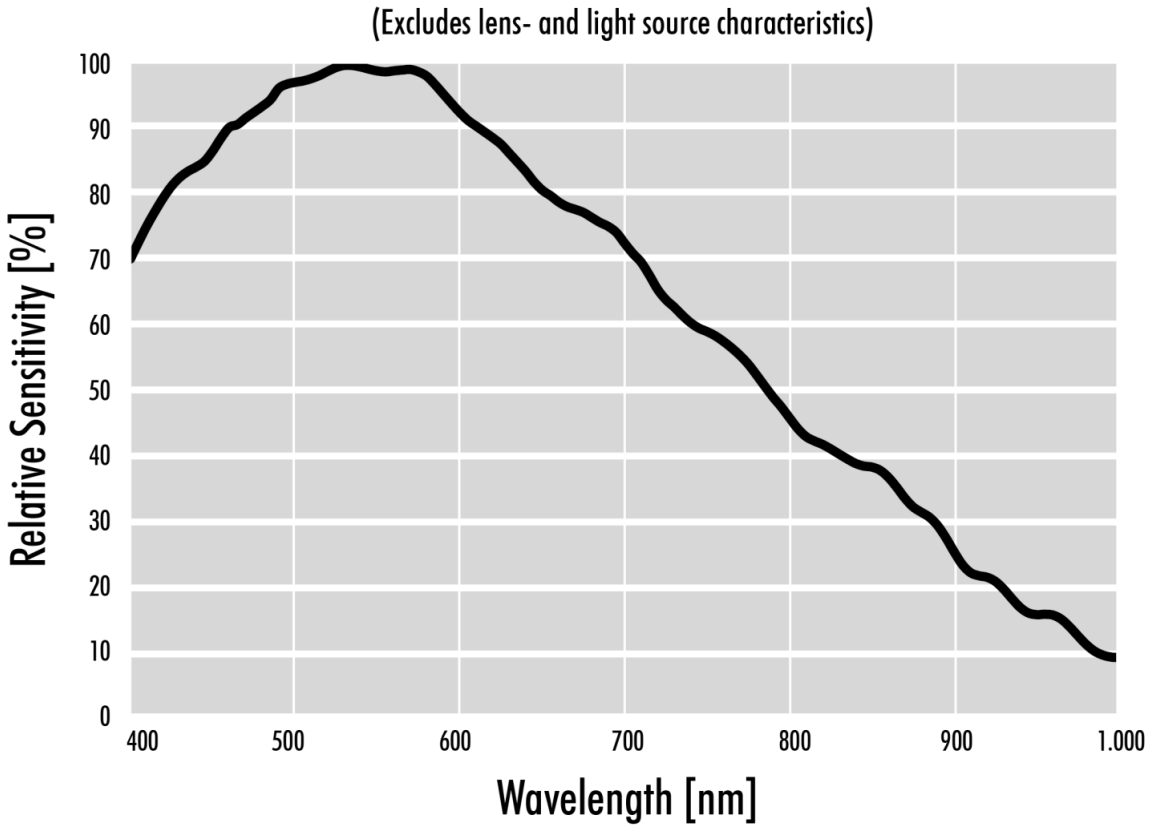
(Excludes lens- and light source characteristics)
Relative Sensitivity [%]
100
90
80
70
60
50
40
30
20
10
0
400
500
600
700
800
900
1.000
Wavelength [nm]

□□□□

front

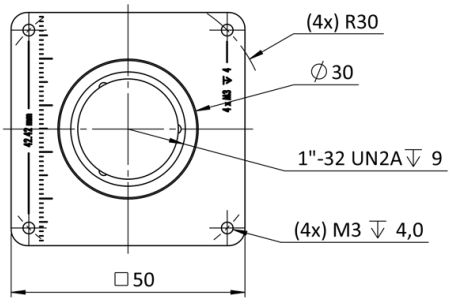

back

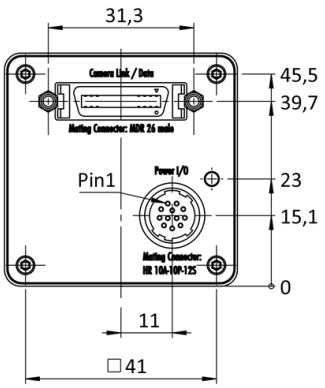

cross section

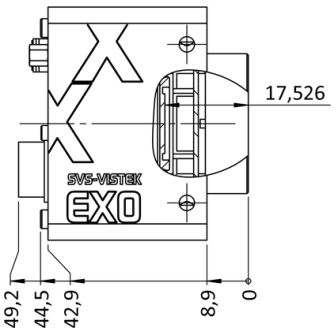

right side

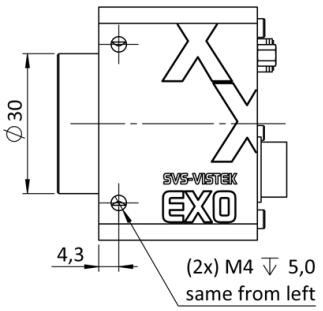

top

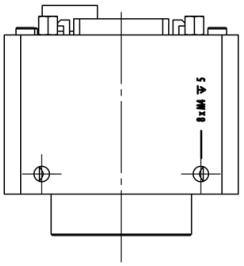

bottom

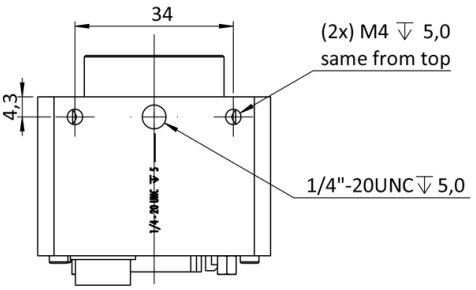

3D

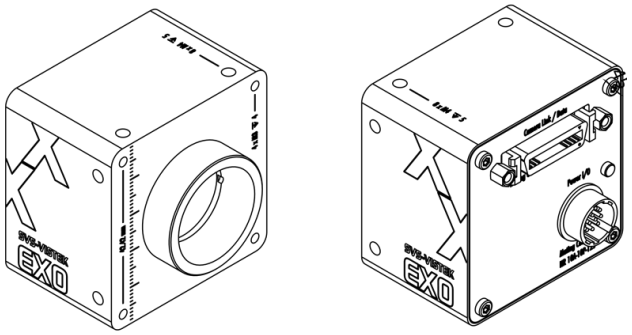

I/O □□□□

Hirose 12 Pin

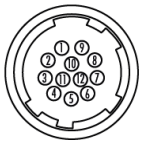

1	VIN –	(GND)	7	OUT 1	(open drain)
2	VIN +	(10 V to 25 V DC)	8	OUT 2	(open drain)
3	IN 4	(RXD RS232)	9	IN 3 +	(opto In +)
4	OUT 4	(TXD RS232)	10	IN 3 –	(opto In –)
5	IN 1	(0 - 24V)	11	OUT 3	(open drain)
6	IN 2	(0 - 24V)	12	OUT 0	(open drain)