EXO Camera Link

exo174MCL



□□	
□□	exo174MCL
□□□□	F001593
□□□□	EXO Camera Link
□□	Discontinued

□□□	
□□□□□	Area scan
□□	Mono
□□	Visible
□□□□	400 nm to 1000 nm
□□□	1,920 × 1,200 (2.30 MP)
□□□□□	Sony IMX174
□□□□□ (□□)	cmos
□□□□	Global shutter (GS)
□□□□□	11.25 × 7.03 mm (13.27 mm, Type 1/1.2)
□□□□	5.86 µm × 5.86 µm

□□□□	
□□□□□	8-bit, 12-bit
□□□□□□	mono8, mono12

□□□□	
□□□□	72 dB
□□□	44 dB

Allied Vision

□□□□□

□□□□□	105 fps
□□□□	25 µs to 60 s
□□	0.0 dB to 18.0 dB

I/O □□□

□□□□	0 x LVDS input, 0 x LVDS output, 0 x TTL input, 0 x TTL output, 2 x 24V input, 4 x Open drain output,
□□□□□□	1 x RS232 input, 1 x RS232 output, 0 x RS422 input, 0 x RS422 output,
□□□□	1 x Optical isolated input, 0 x Optical isolated input,
I/O □□□	12-pin Hirose HR10A-10P-12S
□□□□	10 to 25VDC
□□	External: 4 W (typical)

□□□□

□□□□	-10 °C to 60 °C (□□)

□□□□

□□□□ (□ x □ x □ mm)	43 × 50 × 50
□□□/□□□□	K9 - AR coating - 400-850nm
□□□□	IP40
□□□□	C-Mount
□□	138 g

□□□□□□ FPGA

□□□□□ (RAM)	192 MByte
□□□□□□□ (Flash)	32 MByte

□□

□□□□	Camera Link Base
□□□□□	(MDR)

FW □□ – □□□□

□□□□	manual, auto, external
□□□□	auto, manual

FW □□ – □□□□

□□□□□□□	roi, lut, mirror-image

FW □□ – □□□□

□□□□/□□	internal, software, external
□□□□□□□	User Sets, PWM(4), Sequencer,

□□□□

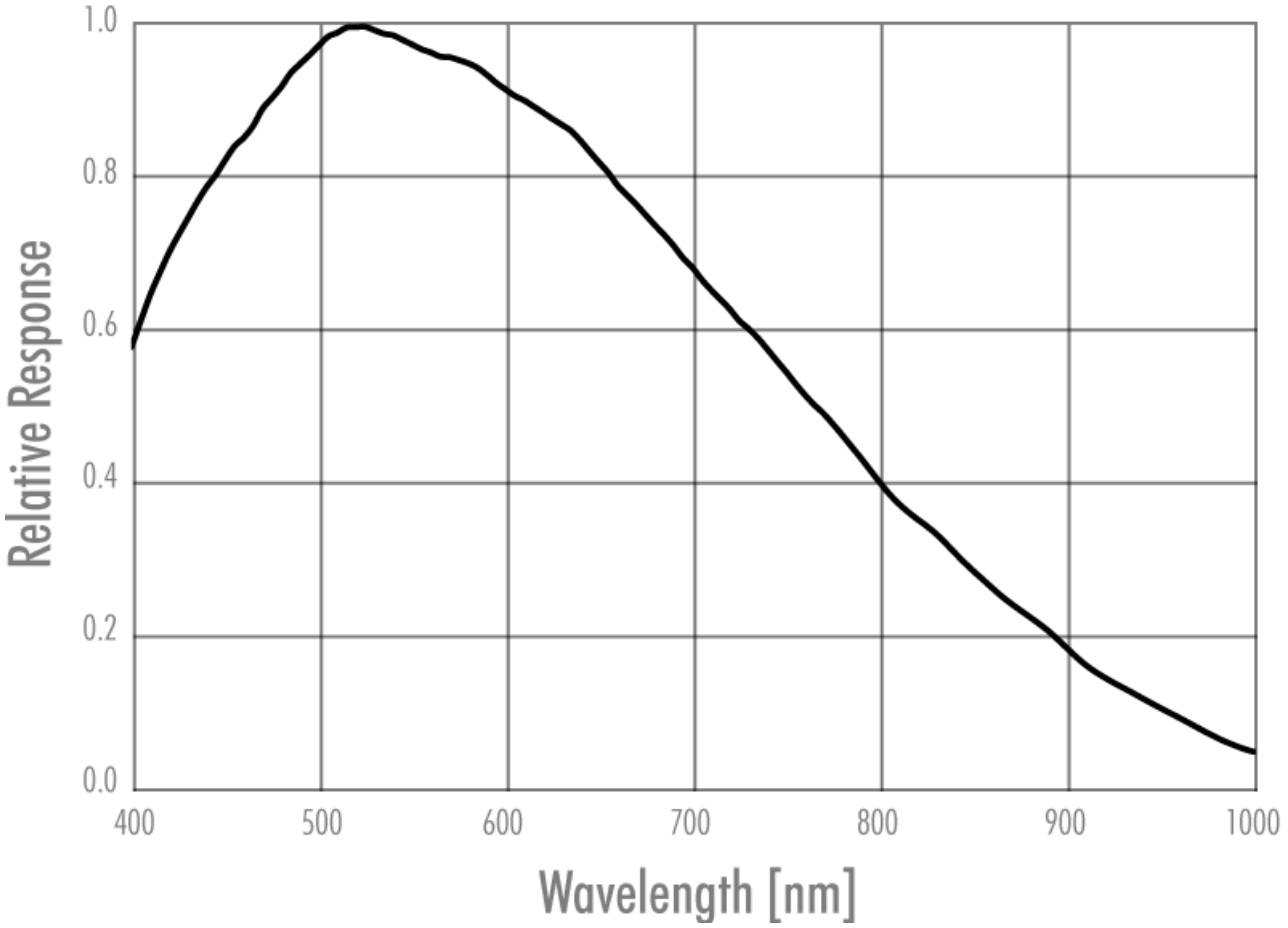
1.0
0.8
0.6
0.4
0.2
0.0
Relative Response
400
500
600
700
800
900
1000
Wavelength [nm]

□□□□

front

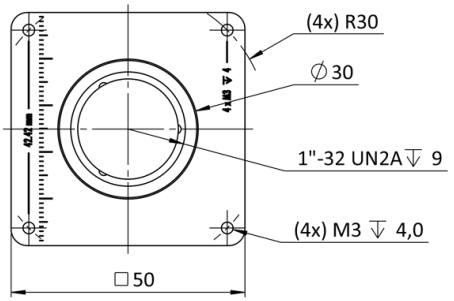

back

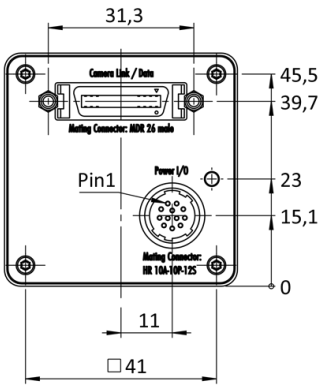

cross section

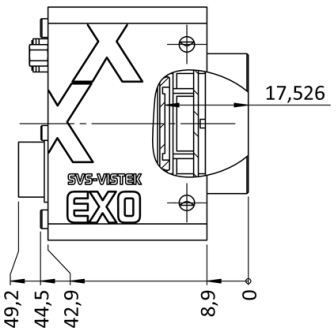

right side

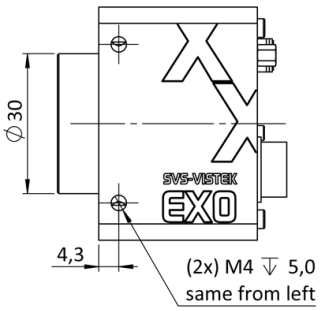

top

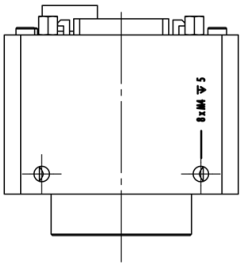

bottom

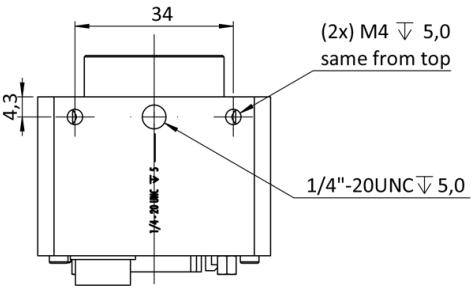

3D

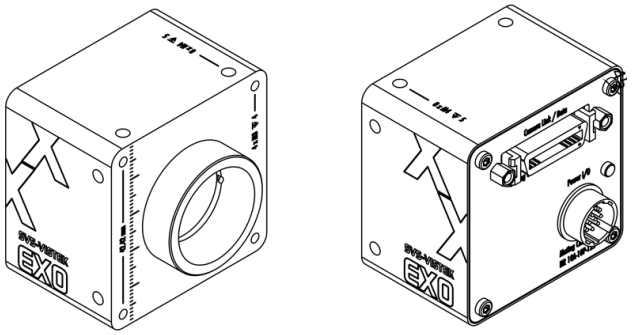

I/O □□□□

Hirose 12 Pin

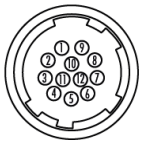

1	VIN –	(GND)	7	OUT 1	(open drain)
2	VIN +	(10 V to 25 V DC)	8	OUT 2	(open drain)
3	IN 4	(RXD RS232)	9	IN 3 +	(opto In +)
4	OUT 4	(TXD RS232)	10	IN 3 –	(opto In –)
5	IN 1	(0 - 24V)	11	OUT 3	(open drain)
6	IN 2	(0 - 24V)	12	OUT 0	(open drain)