Allied Vision



EoSens CoaXPress-12

EoSens1.1MCX12-CM

□□	
□□	EoSens1.1MCX12-CM
□□□□	F006001
□□□□	EoSens CoaXPress-12
□□	Available

□□□	
□□□□□	Area scan
□□	Mono
□□	Visible
□□□□	400 nm to 1000 nm
□□□	1,280 × 864 (1.10 MP)
□□□□□	Luxima LUX13HS
□□□□□ (□□)	cmos
□□□□	Global shutter (GS)
□□□□□	17.54 × 11.84 mm (21.16 mm, Type 4/3)
□□□□	13.70 µm × 13.70 µm

□□□□	
□□□□□	8-bit, 10-bit
□□□□□□	mono8, mono10

□□□□□	
□□□□□	3674 fps
□□□□□ ROI □□	1280 x 864 | 3674 fps, 1280 x 768 | 4151 fps, 640 x 480 | 6576 fps, 128 x 128 | 23821 fps, x | 224673 fps,
□□□□	2 µs to 1 s
□□	0.0 dB to 18.0 dB

I/O □□□

□□□□	0 x LVDS input, 0 x LVDS output, 0 x TTL input, 0 x TTL output, 2 x 24V input, 0 x Open drain output,
□□□□□□	0 x RS232 input, 0 x RS232 output, 0 x RS422 input, 0 x RS422 output,
□□□□	0 x Optical isolated input, 0 x Optical isolated input,
I/O □□□	12-pin Hirose HR10A-10P-12S
□□□□	12 to 24VDC, Power over CoaXPress
□□	External: 14 W (typical)

□□□□

□□□□	-10 °C to 45 °C (□□□□□□)

□□□□

□□□□ (□ x □ x □ mm)	54 × 80 × 80
□□□□	IP30
□□□□	C-Mount
□□	500 g

□□

□□□□	cxp-12 with 4 connections
□□□□□	(micro-BNC)
□□□□	CoaXPress 2.0

FW □□ – □□□□

□□□□	external
□□□□	digital, analog
□□□□□	true
□□□□□□	roi, mirror-image

FW □□ – □□□□

□□□□/□□	external, trigger-over-cxp

□□□□

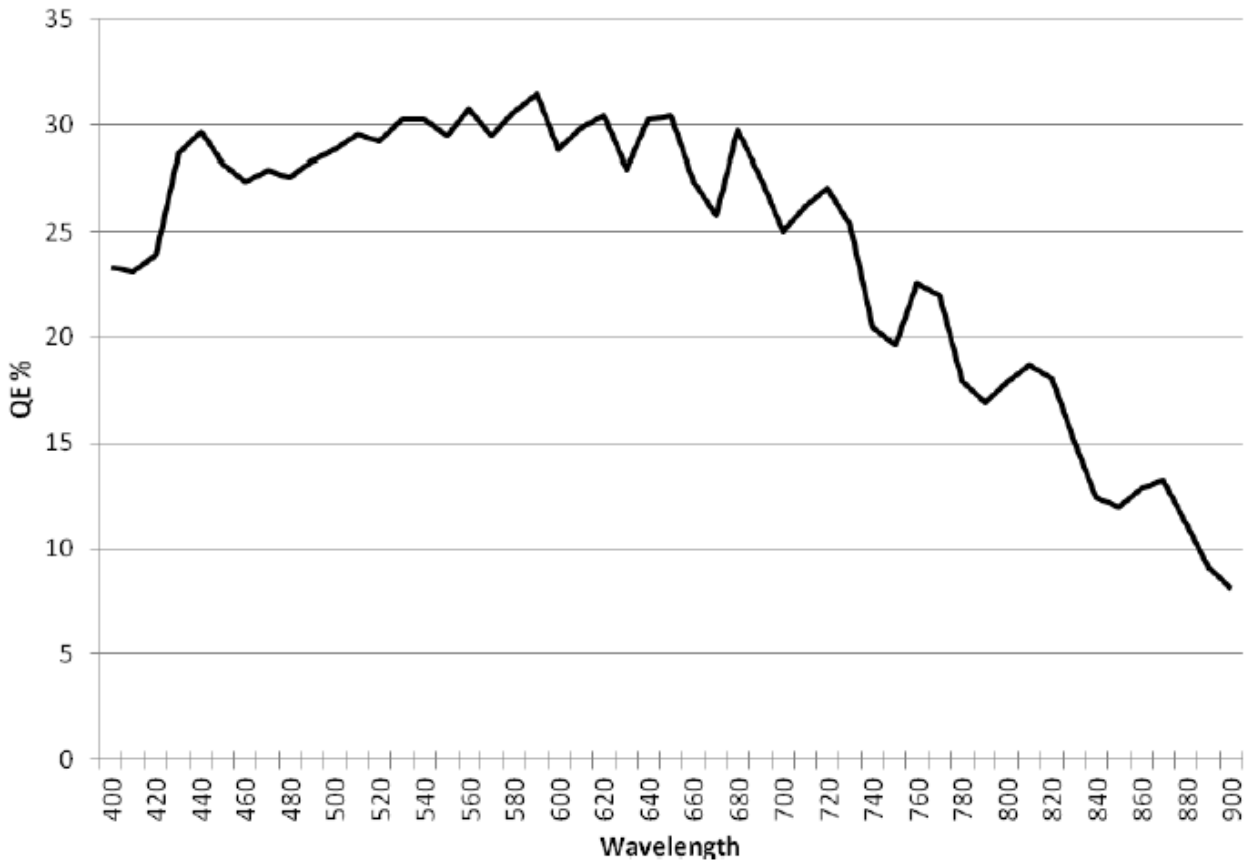
35
30
25
20
15
10
5
0
QE %
400
420
440
460
480
500
520
540
560
580
600
620
640
660
680
700
720
740
760
780
800
820
840
860
880
900
Wavelength

□□□□

Technical Drawing Front View

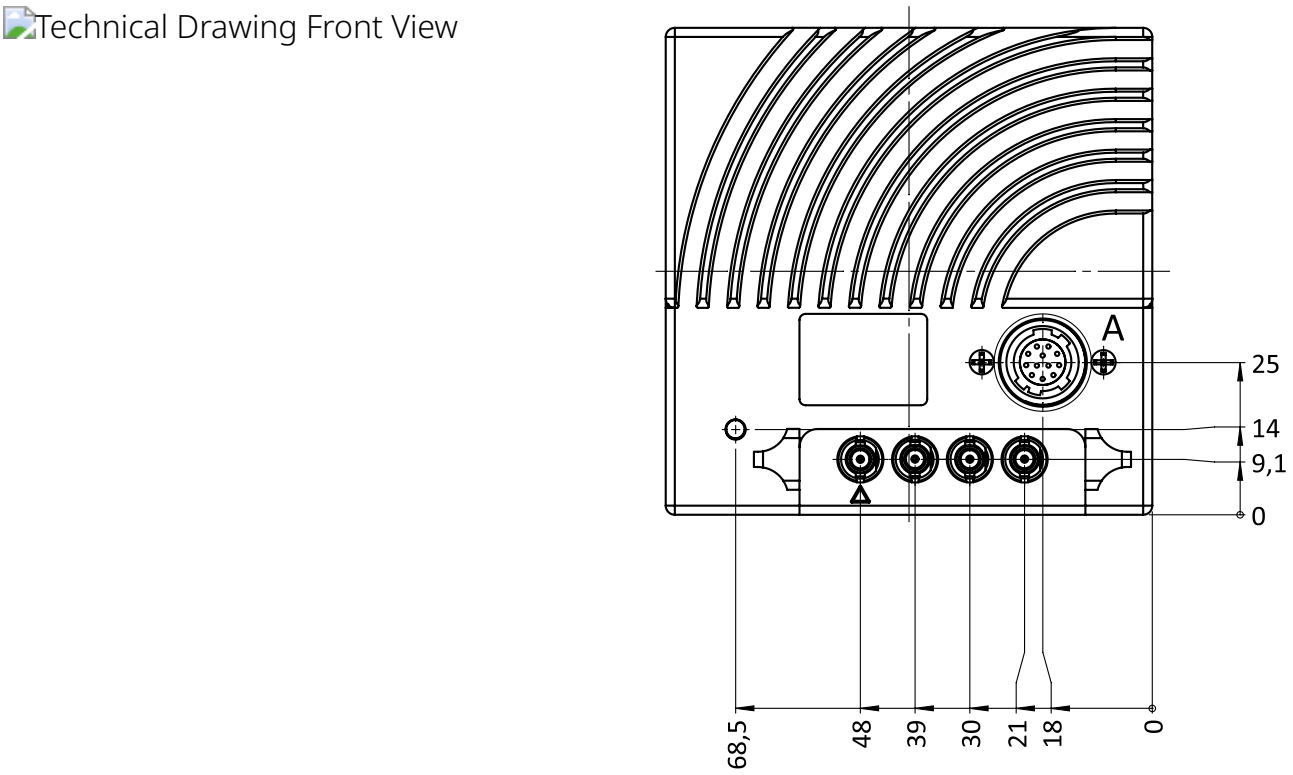

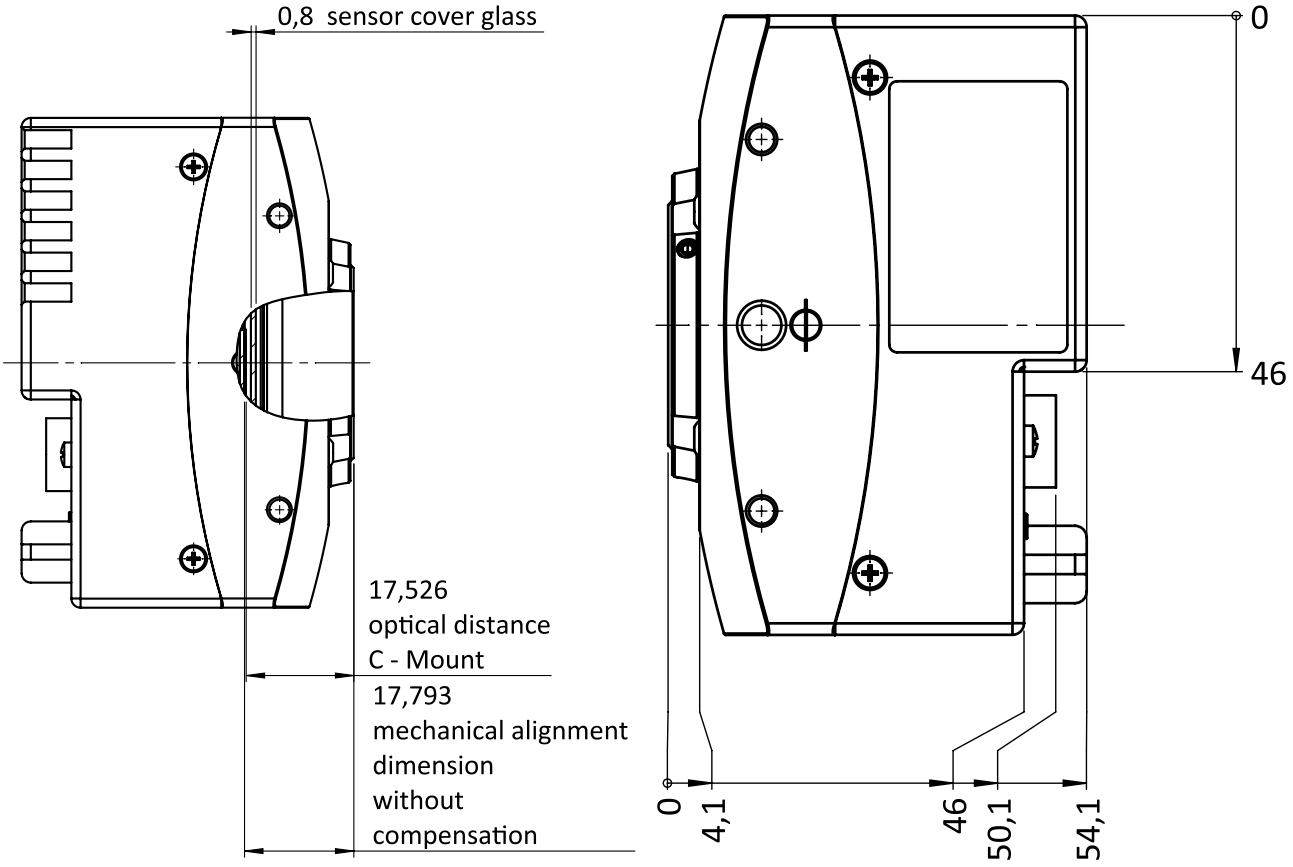

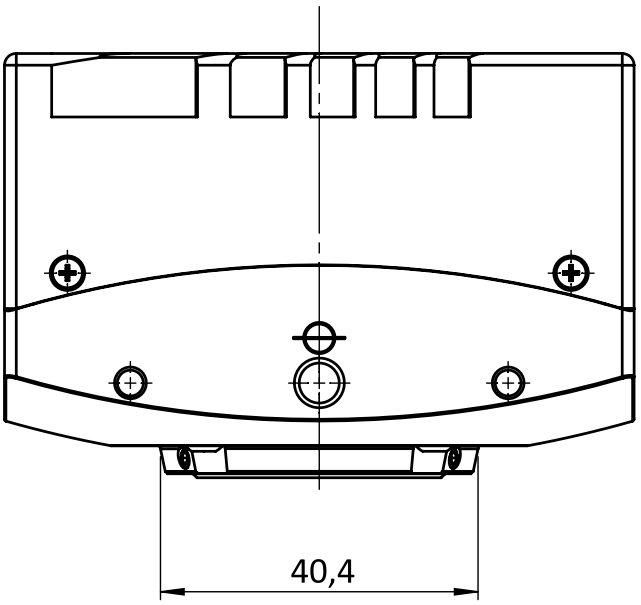

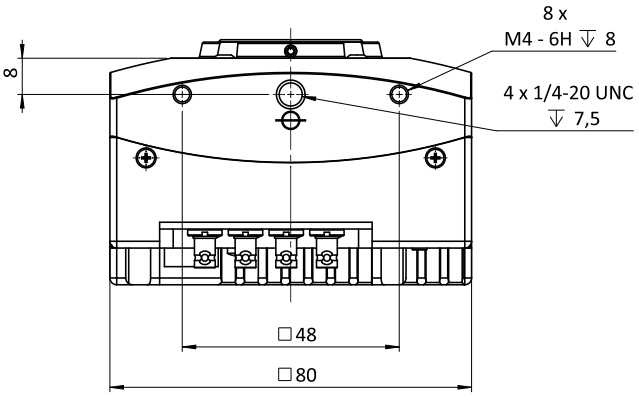

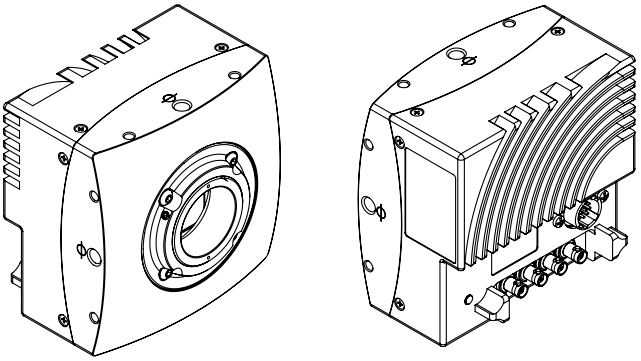

I/O □□□□

	Pin	Signal	Pin	Signal
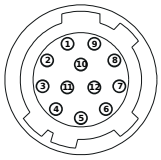	1 + 12	GND	6	IN0
	2 + 11	VCC (12- 24 V)	7	IO_{GND}
	3	IO_{GND}	8	OUT1
	4	OUT0	9	IO_{GND}
	5	IO_{GND}	10	IN1