Allied Vision

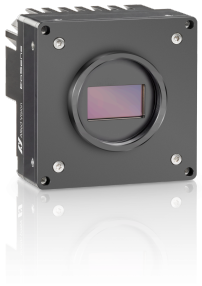

EoSens CoaXPress-12

EoSens10MCX12-M42

□□	
□□	EoSens10MCX12-M42
□□□□	F006231
□□□□	EoSens CoaXPress-12
□□	Available

□□□	
□□□□□	Area scan
□□	Mono
□□	Visible
□□□□	350 nm to 1000 nm
□□□	4,608 × 2,176 (10.00 MP)
□□□□□	Gpixel GSPRINT4510
□□□□□ (□□)	cmos
□□□□	Global shutter (GS)
□□□□□	20.74 × 9.79 mm (22.93 mm, Type 4/3)
□□□□	4.50 µm × 4.50 µm

□□□□	
□□□□□	8-bit, 12-bit
□□□□□□	mono8, mono12

□□□□	
□□□□	68.8 dB

□□□□□	
□□□□□	482 fps

□□□□□

□□□□□ ROI □□	4608 x 2176 | 478 fps,
□□□□	1 µs to 1 s
□□	0.0 dB to 12.0 dB

I/O □□□

□□□□	0 x LVDS input, 0 x LVDS output, 0 x TTL input, 0 x TTL output, 2 x 24V input, 0 x Open drain output,
□□□□□□	0 x RS232 input, 0 x RS232 output, 0 x RS422 input, 0 x RS422 output,
□□□□	0 x Optical isolated input, 0 x Optical isolated input,
I/O □□□	12-pin Hirose HR10A-10P-12S
□□□□	12 to 24VDC, Power over CoaXPress
□□	External: 20 W (typical)

□□□□

□□□□	-10 °C to 65 °C (□□□□□□)

□□□□

□□□□ (□ x □ x □ mm)	55 × 80 × 80
□□□□	IP30
□□□□	M42x0.75
□□	630 g

□□

□□□□	cxp-12 with 4 connections
□□□□□	(micro-BNC)

FW □□ – □□□□

□□□□	external
□□□□	digital, analog
□□□□□	true
□□□□□□	roi, mirror-image

FW □□ – □□□□

□□□□/□□	external, trigger-over-cxp

□□□□

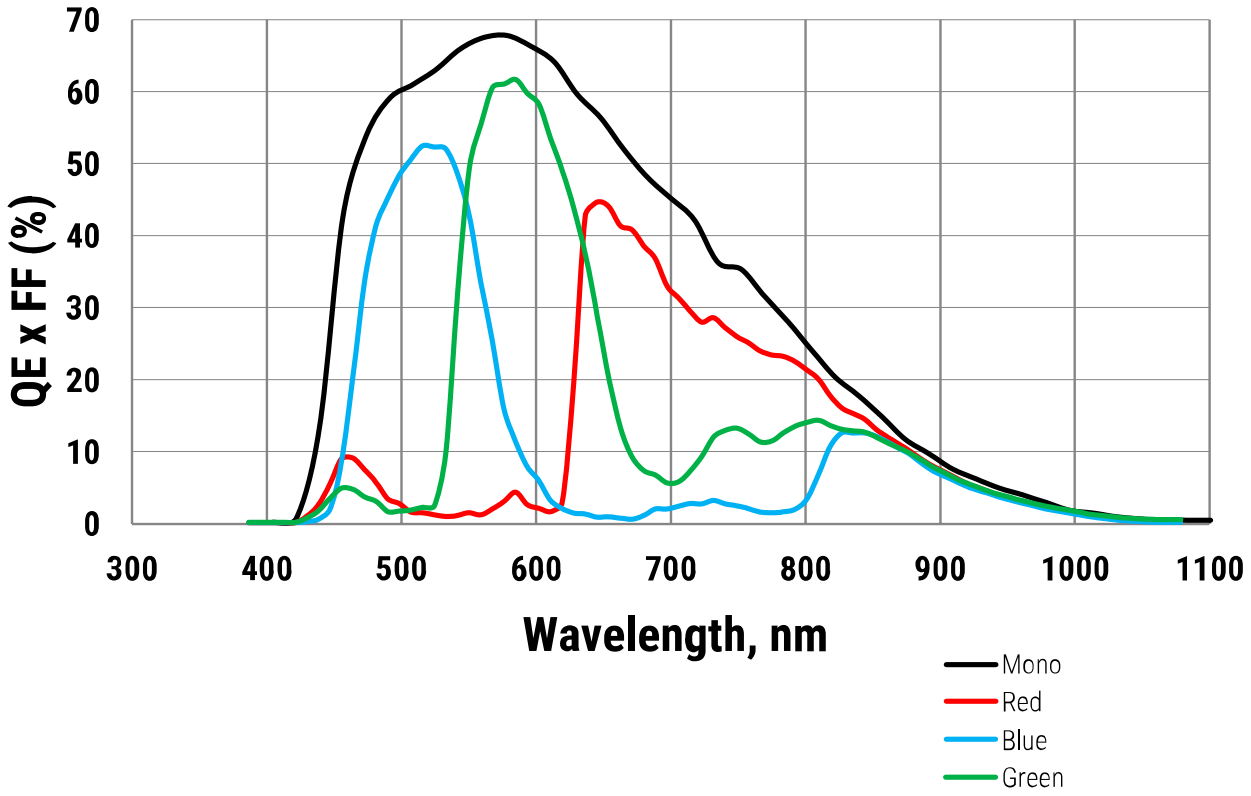
70
60
50
40
30
20
10
0
QE x FF (%)
300
400
500
600
700
800
900
1000
1100
Wavelength, nm
Mono
Red
Blue
Green

□□□□

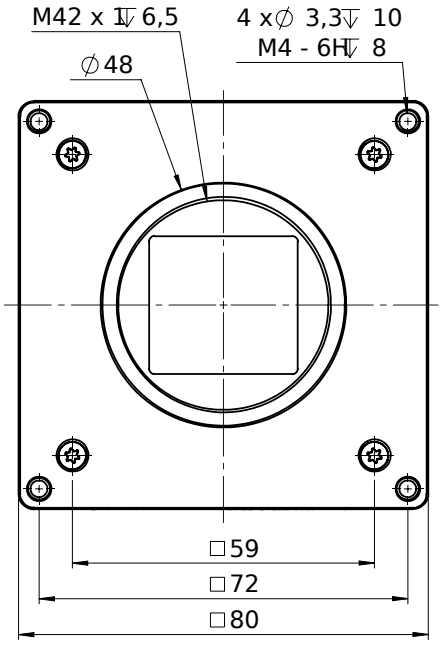
M42 x 1 ↧ 6,5
4 x ∅ 3,3 ↧ 10
M4 - 6H ↧ 8
∅48
□59
□72
□80

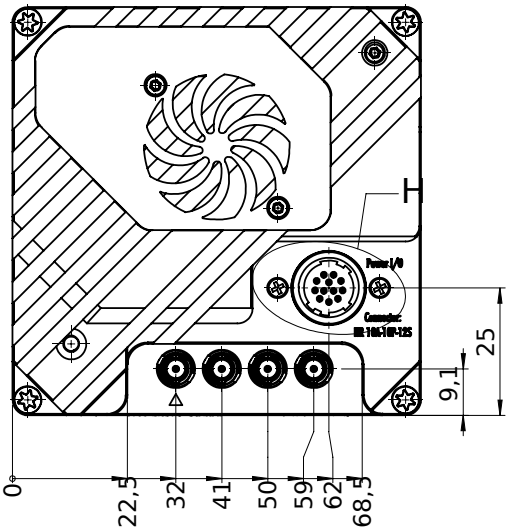
25
9,1
0
22,5
32
41
50
59
62
68,5

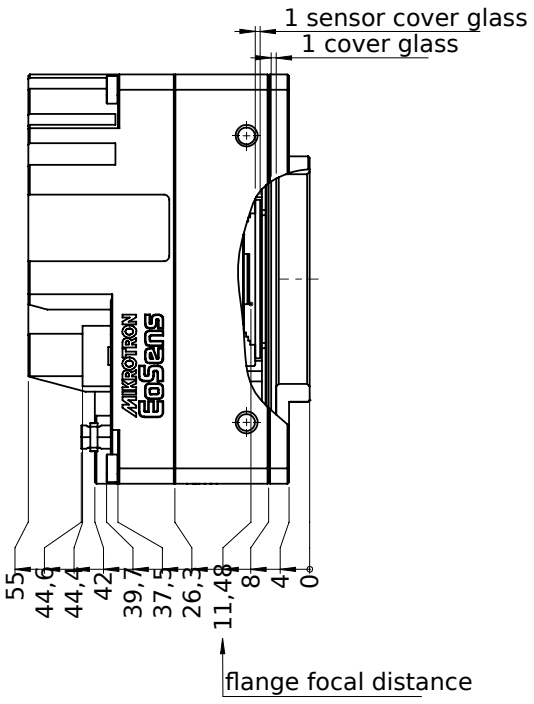
1 sensor cover glass
1 cover glass
55
44,6
44,4
42
39,7
37,5
26,3
11,48
8
4
0
flange focal distance

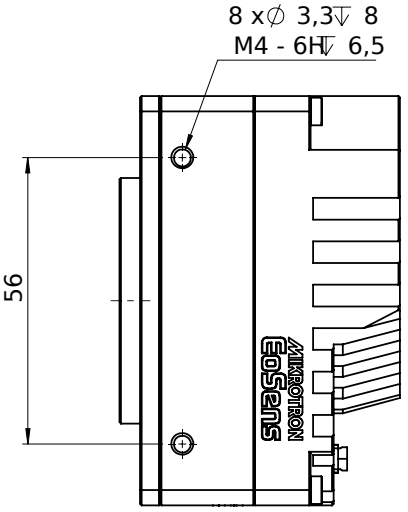
8 x ∅ 3,3 ↧ 8
M4 - 6H ↧ 6,5
56

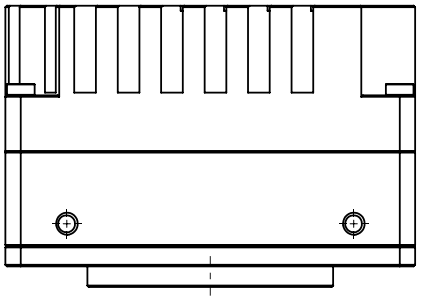

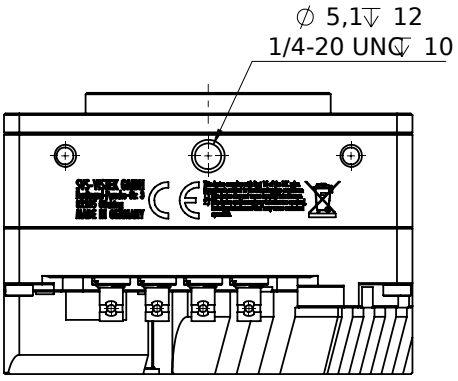

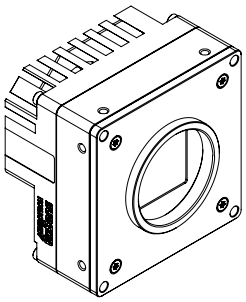

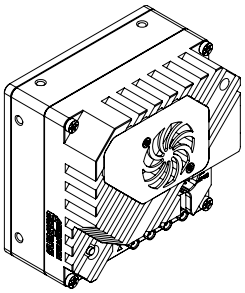

I/O □□□□

	Pin	Signal	Pin	Signal
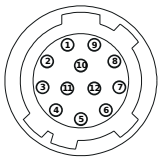	1 + 12	GND	6	IN0
	2 + 11	VCC (12- 24V)	7	IO_{GND}
	3	IO_{GND}	8	OUT1
	4	OUT0	9	IO_{GND}
	5	IO_{GND}	10	IN1