

EoSens CoaXPress-12

EoSens9.5MCX12-M58

□□	
□□	EoSens9.5MCX12-M58
□□□□	F006223
□□□□	EoSens CoaXPress-12
□□	Available

□□□	
□□□□□	Area scan
□□	Mono
□□	Visible
□□□□	380 nm to 1000 nm
□□□	4,096 × 2,304 (9.50 MP)
□□□□□	Luxima LUX9506
□□□□□ (□□)	cmos
□□□□	Global shutter (GS)
□□□□□	26.62 × 14.98 mm (30.55 mm, Type 2)
□□□□	6.50 µm × 6.50 µm

□□□□	
□□□□□	8-bit, 10-bit, 12-bit
□□□□□□	mono8, mono10, mono12

□□□□□	
□□□□□	503 fps
□□□□□ ROI □□	4096 x 2304 | 503 fps, 1920 x 1080 | 2243 fps, 1280 x 720 | 4898 fps, 640 x 480 | 13498 fps, 4096 x 100 | 11039 fps, 512 x 512 | 15767 fps, 512 x 8 | 225000 fps,
□□□□	2 µs to 40.00 ms

□□□□□

□□	0.0 dB to 12.0 dB

I/O □□□

□□□□	1 x LVDS input, 1 x LVDS output, 0 x TTL input, 0 x TTL output, 2 x 24V input, 2 x Open drain output,
□□□□□□	1 x RS232 input, 1 x RS232 output, 0 x RS422 input, 0 x RS422 output,
□□□□	0 x Optical isolated input, 0 x Optical isolated input,
I/O □□□	12-pin Hirose HR10A-10P-12S
□□□□	Power over CoaXPress only
□□	21 W (typical)

□□□□

□□□□	-10 °C to 60 °C (□□)

□□□□

□□□□ (□ x □ x □ mm)	57 × 80 × 80
□□□□	IP30
□□□□	M58x0.75
□□	630 g

□□

□□□□	cxp-12 with 4 connections
□□□□□	(micro-BNC)
□□□□	CoaXPress 2.0

FW □□ – □□□□

□□□□	external
□□□□	digital, analog
□□□□□□	roi, mirror-image, dpc, shading-correction

FW □□ – □□□□

□□□□/□□	external, trigger-over-cxp

□□□□

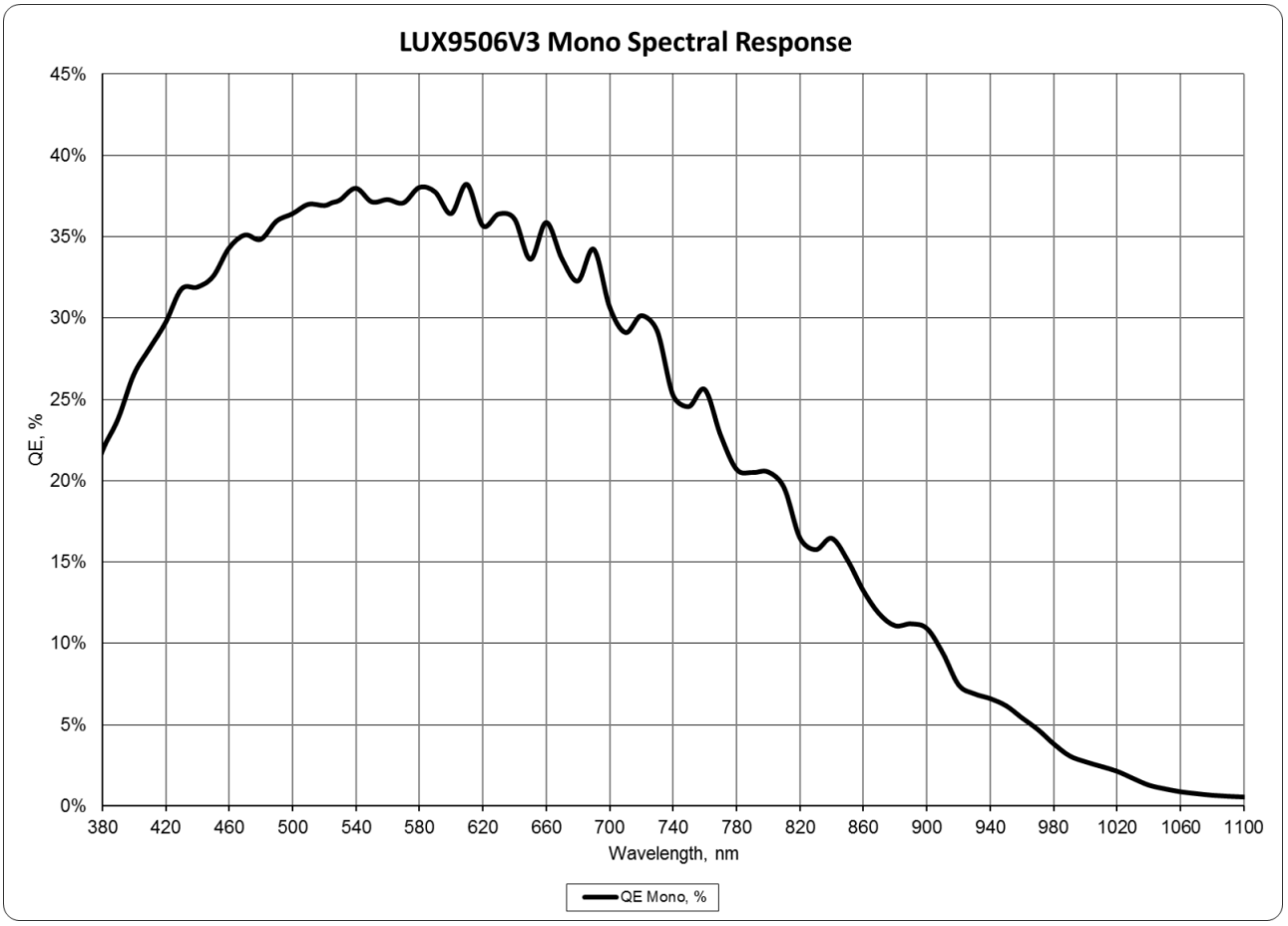
LUX9506V3 Mono Spectral Response
45%
40%
35%
30%
25%
20%
15%
10%
5%
0%
QE, %
380
420
460
500
540
580
620
660
700
740
780
820
860
900
940
980
1020
1060
1100
Wavelength, nm
QE Mono, %

□□□□

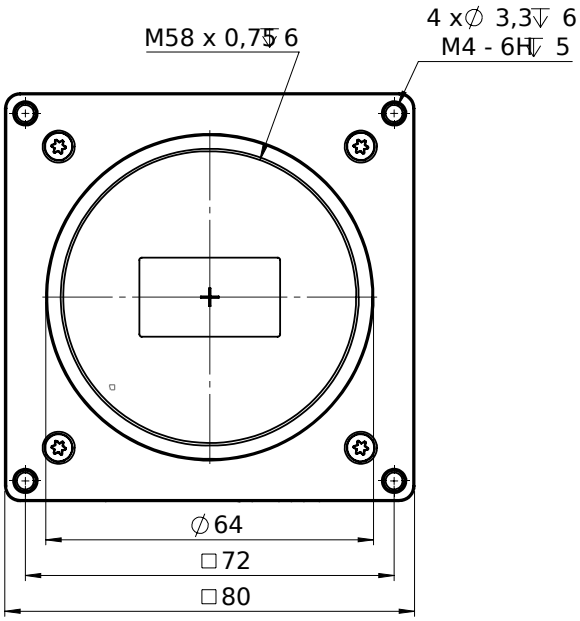
M58 x 0,75 6
4 x∅ 3,3↧ 6
M4 - 6H↧ 5
∅64
□72
□80

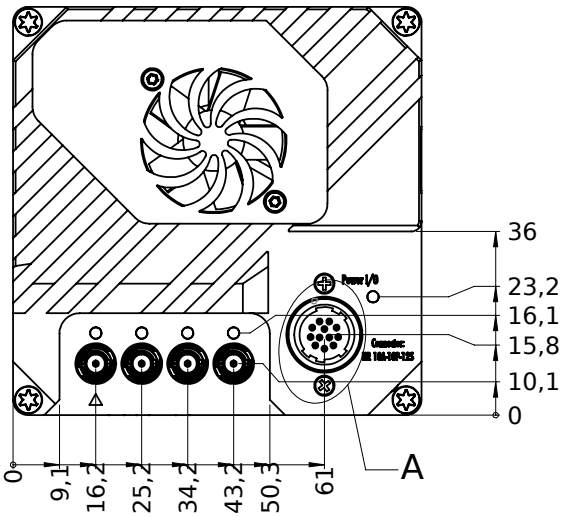
36
23,2
16,1
15,8
10,1
0
A
0
9,1
16,2
25,2
34,2
43,2
50,3
61

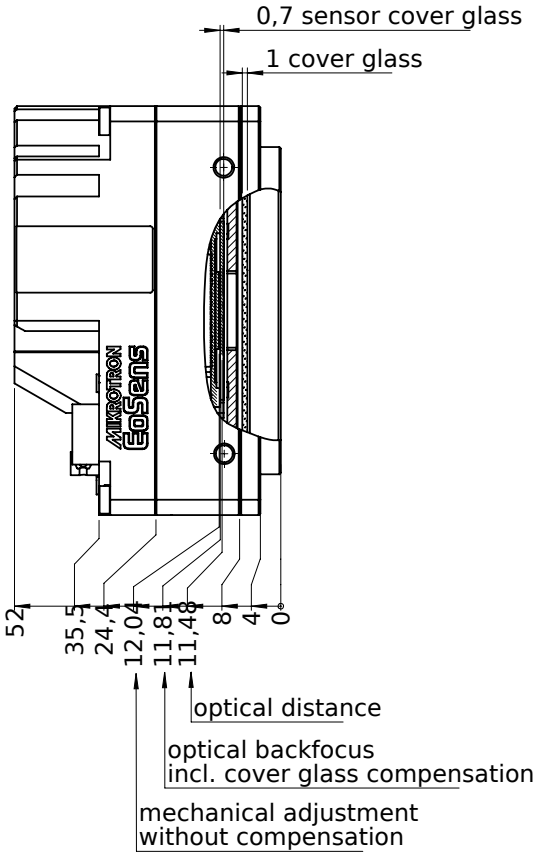
0,7 sensor cover glass
1 cover glass
52
35,5
24,4
12,04
11,81
11,48
8
4
0
optical distance
optical backfocus
incl. cover glass compensation
mechanical adjustment
without compensation

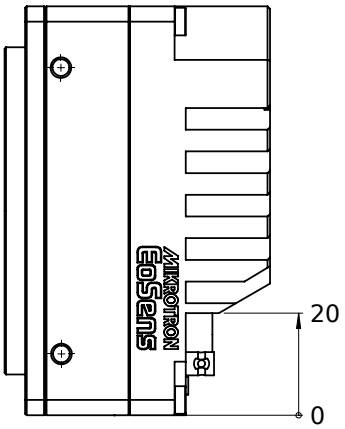
20
0

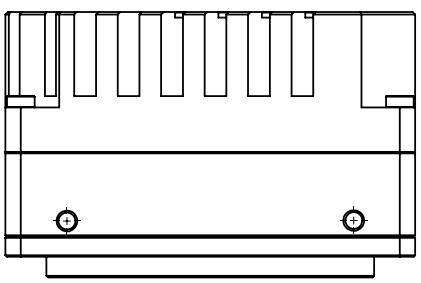

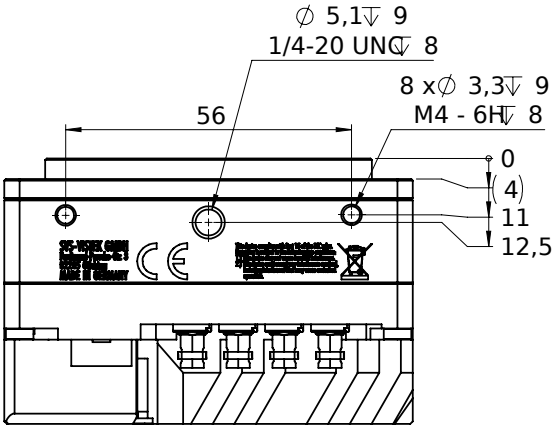
∅ 5,1↧ 9
1/4-20 UNC↧ 8
8 x∅ 3,3↧ 9
M4 - 6H↧ 8
56
0
(4)
11
12,5

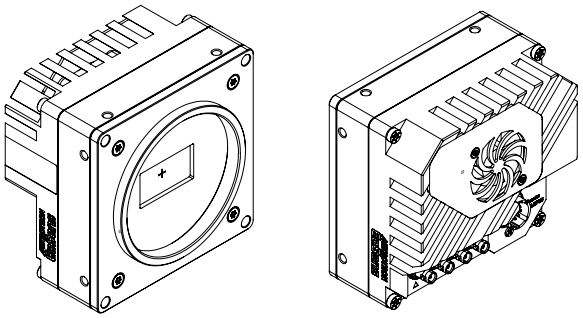

I/O □□□□

	Pin	Signal	Pin	Signal
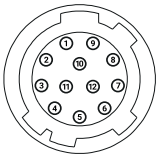	1	V_{out}- (GND)	7	OUT 1 (open drain)
	2	V_{out}+ (24 V)	8	OUT 2 (open drain)
	3	IN 4 RxD (RS 232)	9	LVDS Input P
	4	OUT 4 TxD (RS 232)	10	LVDS Input N
	5	IN 1 (0-24 V)	11	LVDS Output P
	6	IN 2 (0-24 V)	12	LVDS Output N