Allied Vision



EoSens CoaXPress-12

EoSens21CCX12-M58

□□	
□□	EoSens21CCX12-M58
□□□□	F006218
□□□□	EoSens CoaXPress-12
□□	Available

□□□	
□□□□□	Area scan
□□	Color
□□	Visible
□□□□	350 nm to 1000 nm
□□□	5,120 × 4,096 (21.00 MP)
□□□□□	Gpixel GSPRINT4521
□□□□□ (□□)	cmos
□□□□	Global shutter (GS)
□□□□□	23.04 × 18.43 mm (29.51 mm, Type APS-C)
□□□□	4.50 µm × 4.50 µm

□□□□	
□□□□□	8-bit, 10-bit, 12-bit
RGB □□□□	bayer8, bayer10, bayer12

□□□□□	
□□□□□	230 fps
□□□□□ ROI □□	5120 x 4096 | 230 fps, 5120 x 3072 | 305 fps, 5120 x 1024 | 891 fps, 5120 x 128 | 5540 fps, x | 12560 fps,
□□□□	4 µs to 1 s
□□	0.0 dB to 12.0 dB

I/O □□□

□□□□	0 x LVDS input, 0 x LVDS output, 0 x TTL input, 0 x TTL output, 2 x 24V input, 0 x Open drain output,
□□□□□□	0 x RS232 input, 0 x RS232 output, 0 x RS422 input, 0 x RS422 output,
□□□□	0 x Optical isolated input, 0 x Optical isolated input,
I/O □□□	12-pin Hirose HR10A-10P-12S
□□□□	12 to 24VDC
□□	External: 21 W (typical)

□□□□

□□□□	-10 °C to 60 °C (□□)

□□□□

□□□□ (□ x □ x □ mm)	55 × 80 × 80
□□□□	IP30
□□□□	M58x0.75
□□	630 g

□□

□□□□	cxp-12 with 4 connections
□□□□□	(micro-BNC)
□□□□	CoaXPress 2.0

FW □□ – □□□□

□□□□	external
□□□□	digital, analog
□□□□□	true
□□□□□□	roi, mirror-image

□□□□

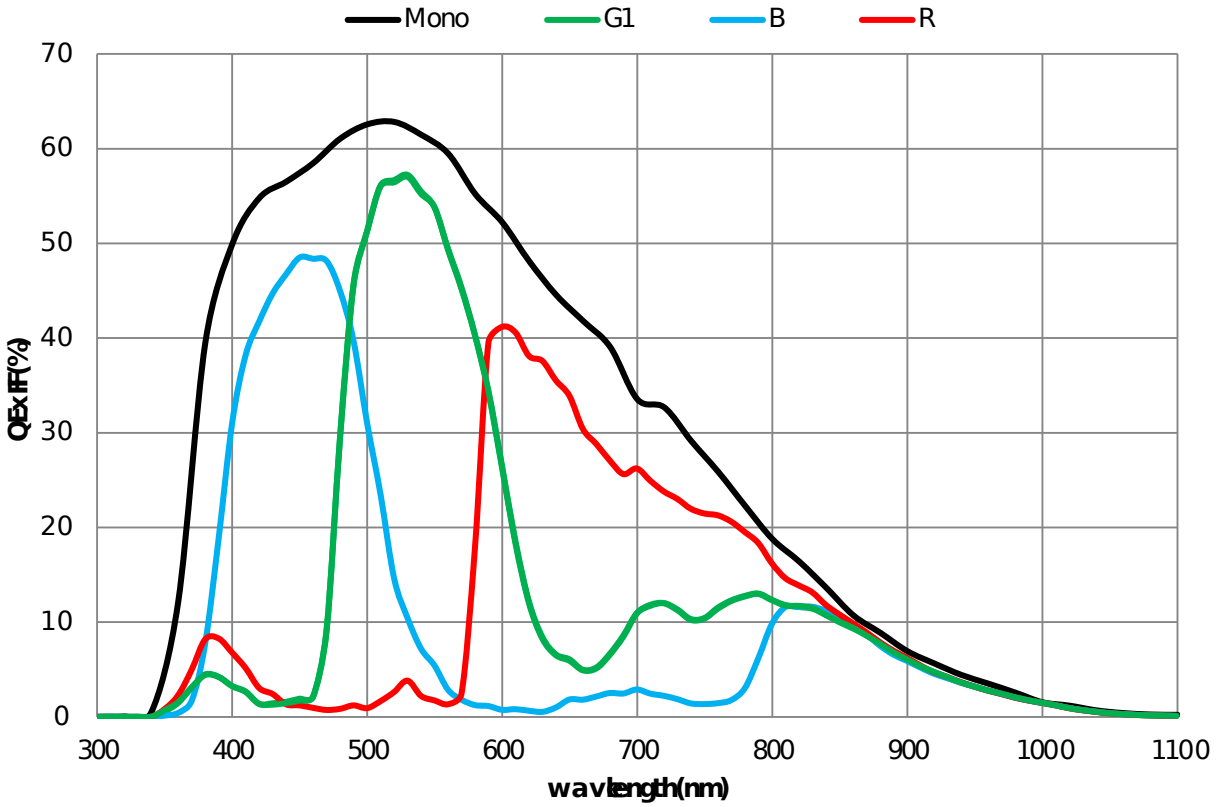
Mono
G1
B
R
70
60
50
40
30
20
10
0
300
400
500
600
700
800
900
1000
1100
QE x IR (%)
wavelength (nm)

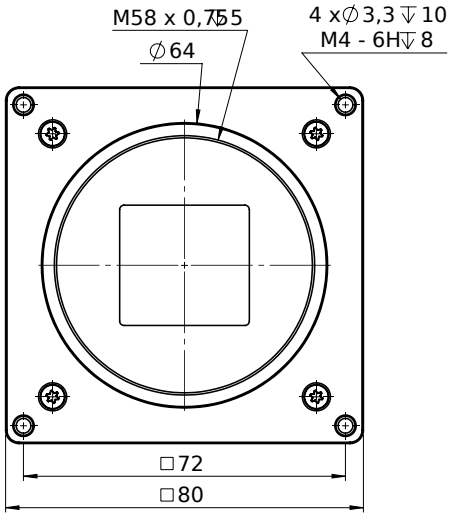
M58 x 0,75
⌀55
⌀64
4 x⌀3,3 ↧10
M4 - 6H↧8
□72
□80

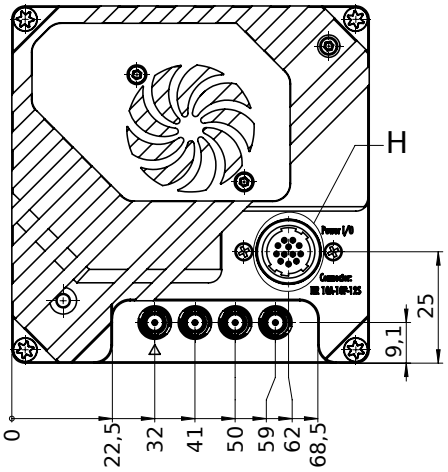
H
25
9,1
0
22,5
32
41
50
59
62
68,5

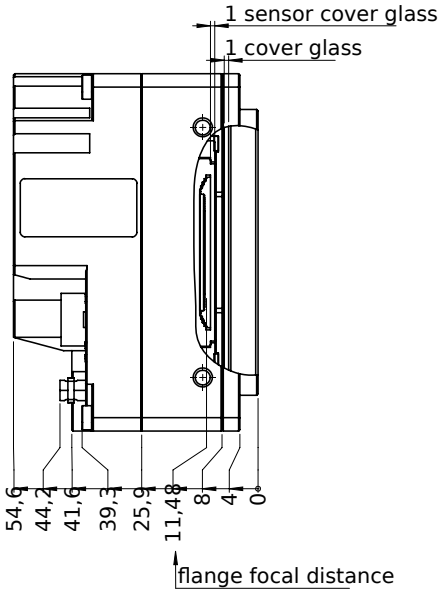
1 sensor cover glass
1 cover glass
54,6
44,2
41,6
39,3
25,9
11,48
8
4
0
flange focal distance

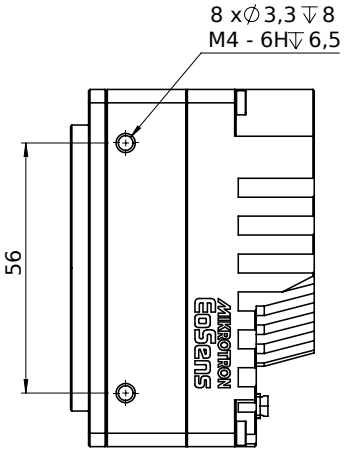
8 x⌀3,3 ↧8
M4 - 6H↧6,5
56

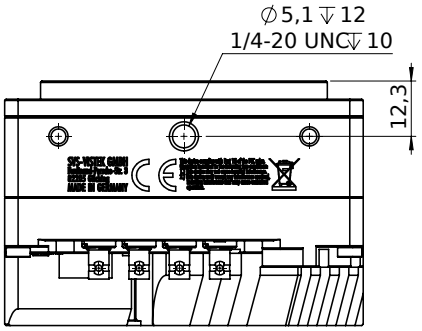

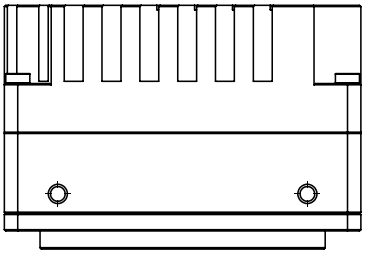

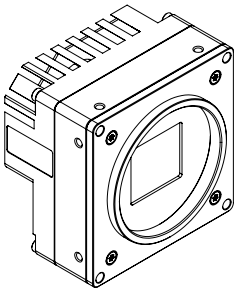

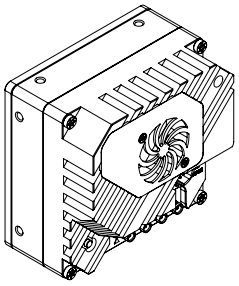

I/O □□□□

	Pin	Signal	Pin	Signal
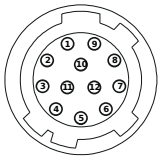	1 + 12	GND	6	IN0
	2 + 11	VCC (12- 24V)	7	IO_{GND}
	3	IO_{GND}	8	OUT1
	4	OUT0	9	IO_{GND}
	5	IO_{GND}	10	IN1