HR 100GigE

hr927C100GE



Preliminary product information. Features and technical specifications are subject to change without notice.

□□	
□□	hr927C100GE
□□□□	F004275
□□□□	HR 100GigE
□□	Prototype/engineering sample

□□□	
□□□□□	Area scan
□□	Color
□□	Visible
□□□□	400 nm to 1000 nm
□□□	10,240 × 10,240 (104.90 MP)
□□□□□	Sony IMX927
□□□□□ (□□)	cmos
□□□□	Global shutter (GS)
□□□□□	28.06 × 28.06 mm (39.68 mm, Type 2.5)
□□□□	2.74 µm × 2.74 µm

□□□□	
□□□□□	8-bit, 10-bit, 12-bit
RGB □□□□	bayer8, bayer10, bayer12

□□□□□	
□□□□□	111.8 fps
□□□□	8 µs to 60 s
□□	0.0 dB to 48.0 dB

preliminary

I/O □□□

□□□□	0 x LVDS input, 0 x LVDS output, 0 x TTL input, 0 x TTL output, 2 x 24V input, 2 x Open drain output,
□□□□□□	0 x RS232 input, 0 x RS232 output, 1 x RS422 input, 1 x RS422 output,
□□□□	0 x Optical isolated input, 0 x Optical isolated input,
I/O □□□	12-pin Hirose HR10A-10P-12S
□□□□	24 to 25VDC
□□	External: 30 W (typical)

□□□□

□□□□	-10 °C to 60 °C (□□)

□□□□

□□□□ (□ x □ x □ mm)	93 × 62 × 62
□□□/□□□□	IR-Cut - 680nm
□□□□	IP30
□□□□	M58x0.75
□□	550 g

□□□□□□ FPGA

□□□□□ (RAM)	4032 MByte
□□□□□□□ (Flash)	32768 MByte

□□

□□□□	100gige
□□□□□	(QSFP28)
□□□□	GigE Vision 3.0

FW □□ – □□□□

□□□□	manual, auto, external
□□□□	auto, manual
□□□□□	auto, manual
□□□□□□	roi, lut, color-transformation, mirror-image

preliminary

Allied Vision

FW □□ – □□□□

□□□□□□□	PTP, RDMA support, User Sets, PWM(4), Sequencer,

preliminary

Allied Vision

□□□□

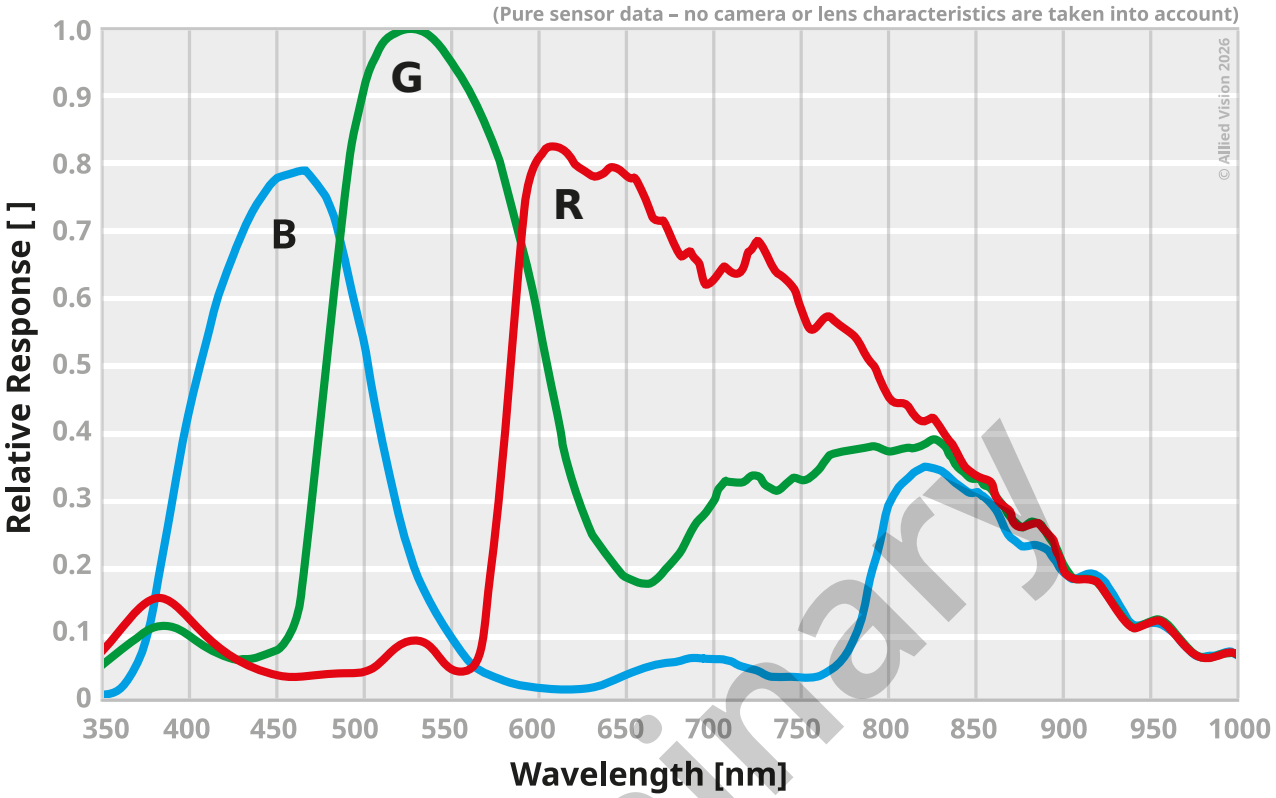

preliminary

□□□□

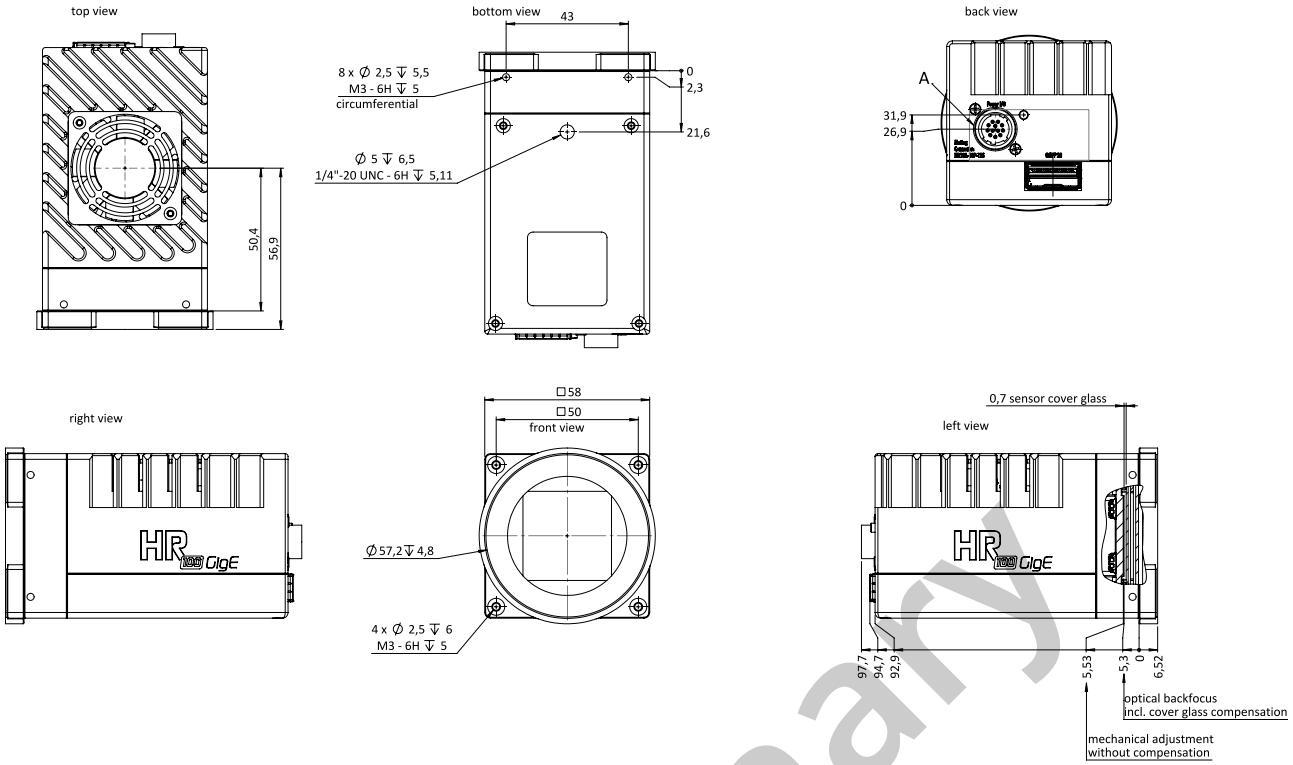

I/O □□□□

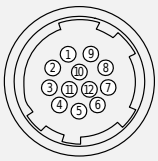

1	VIn- (GND)
2	VIn+ (24 V DC)
3	In 4 (RxD RS232)
4	Out 4 (TxD RS232)
5	In 1 (0 ... 24 V)
6	In 2 (0 ... 24 V)
7	Out 1 (open drain)
8	Out 2 (open drain)
9	In 3+(opto In+)
10	In 3-(opto In-)
11	Out 3 (open drain)
12	Out 0 (open drain)

preliminary