FXO CoaXPress

fxo536MCX12-2C



□□	
□□	fxo536MCX12-2C
□□□□	F002253
□□□□	FXO CoaXPress
□□	Available

□□□	
□□□□□	Area scan
□□	Mono
□□	Visible
□□□□	400 nm to 1000 nm
□□□	2,848 × 2,848 (8.10 MP)
□□□□□	Sony IMX536
□□□□□□□□□	cmos
□□□□	Global shutter (GS)
□□□□□	7.8 × 7.8 mm (11.04 mm, Type 2/3)
□□□□	2.74 µm × 2.74 µm

□□□□	
□□□□□□	12-bit, 8-bit
□□□□□□	mono12, mono8

□□□□	
□□□□	72 dB
□□□	39 dB

□□□□□

□□□□	195 fps
□□□□	21 µs to 60 s
□□	0.0 dB to 48.0 dB

I/O□□□

□□□□□IO	0 x LVDS input, 0 x LVDS output, 0 x TTL input, 0 x TTL output, 2 x 24V input, 4 x Open drain output,
□□□□□□□IO	1 x RS232 input, 1 x RS232 output, 0 x RS422 input, 0 x RS422 output,
□□□□□□	1 x Optical isolated input, 0 x Optical isolated input,
I/O□□	12-pin Hirose HR10A-10P-12S
□□□□	10 to 25VDC, Power over CoaXPress
□□	External: 13 W (typical)

□□□□

□□□□	-10 °C to 60 °C (□□)
Humidity	10 % to 90 % (non-condensing)

□□□□

□□□□□L x W x H mm□	73 × 50 × 50
□□□/□□□□	K9 - AR coating - 400-850nm
IP□□□□	IP30
□□□□	C-Mount
□□	240 g

□□□□□FPGA

□□□□□□□□□□□□	32 MByte

□□

□□□□	cxp-12 with 2 connections
□□□□□	(micro-BNC)
□□□□	CoaXPress 2.0

□□□□ - □□□□

□□□□	auto, external, manual

□□□□ - □□□□

□□□□	auto, manual
□□□□□□	dpc, ffc, lut, mirror-image, roi, shading-correction

□□□□ - □□□□

□□□□/□□	external, internal, software

Quantum Efficiency

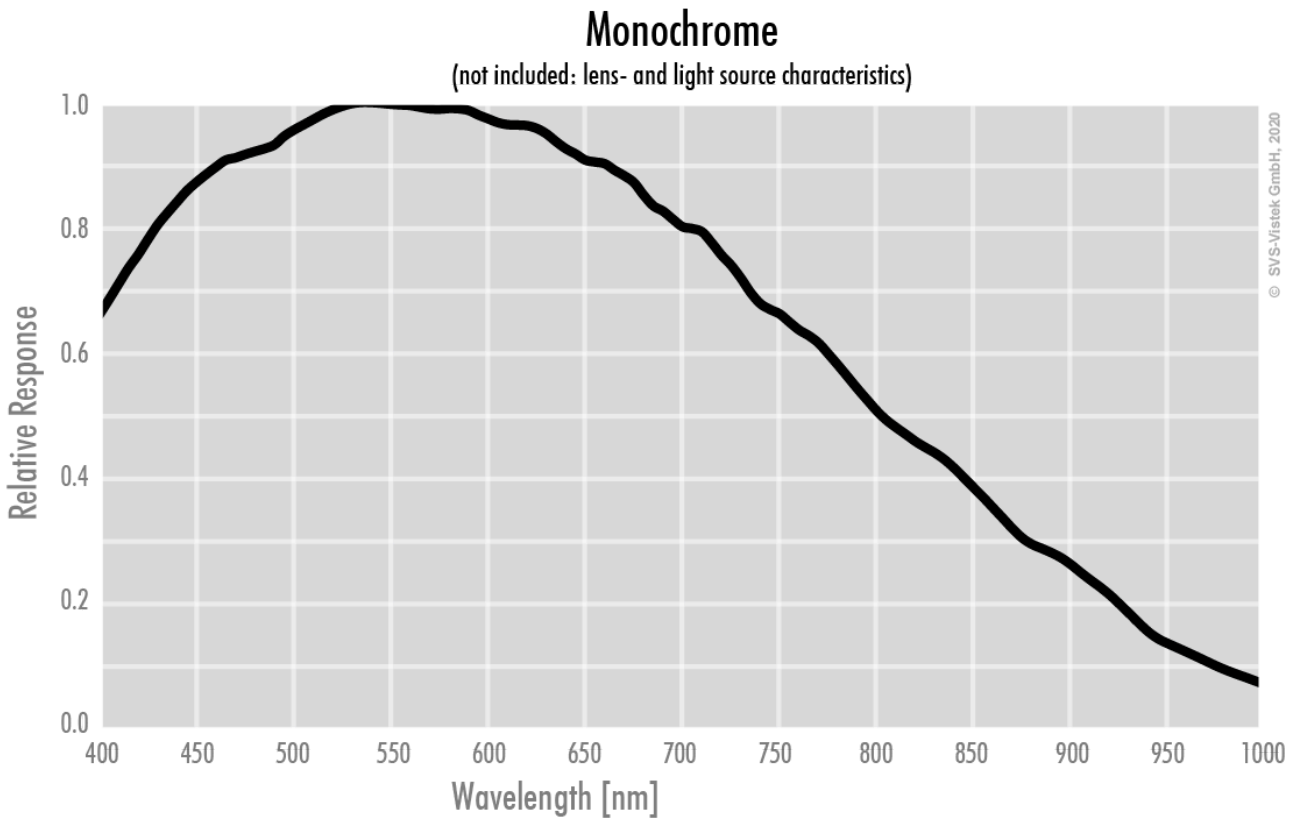

Technical Drawing

back view

front view

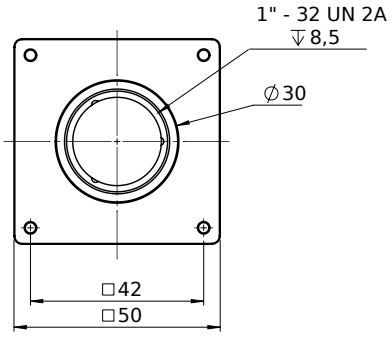

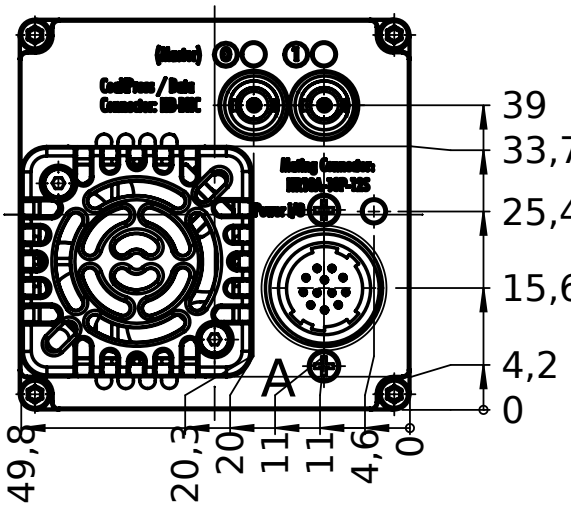

left view

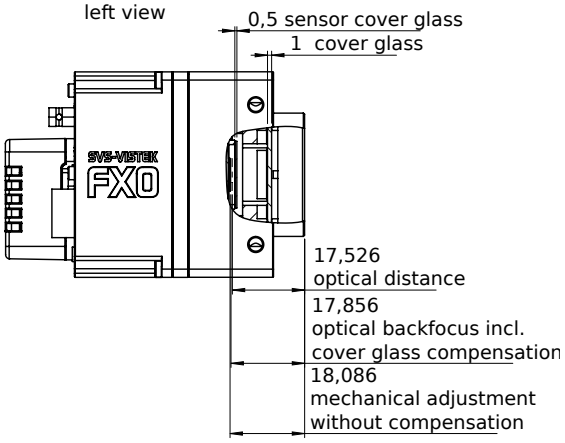

right view

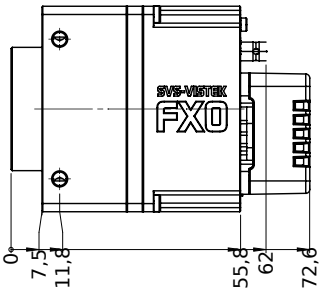

top view

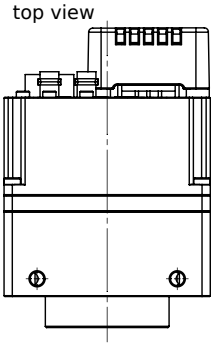

bottom view

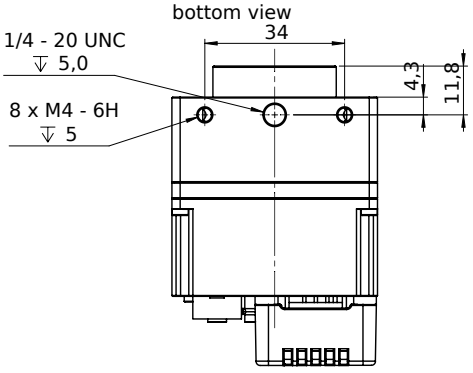

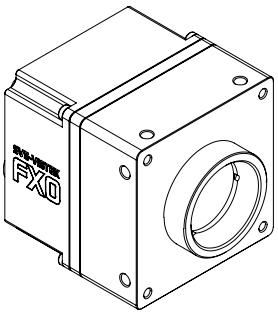

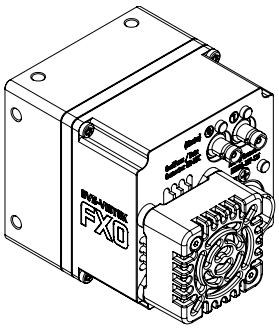

I/O pin assignment

Hirose 12 Pin

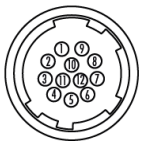

1	VIN –	(GND)	7	OUT 1	(open drain)
2	VIN +	(10 V to 25 V DC)	8	OUT 2	(open drain)
3	IN 4	(RXD RS232)	9	IN 3 +	(opto In +)
4	OUT 4	(TXD RS232)	10	IN 3 –	(opto In –)
5	IN 1	(0 - 24V)	11	OUT 3	(open drain)
6	IN 2	(0 - 24V)	12	OUT 0	(open drain)