

EoSens CoaXPress-12

EoSens2.0CCX12-CM

□□	
□□	EoSens2.0CCX12-CM
□□□□	F006009
□□□□	EoSens CoaXPress-12
□□	Available

□□□	
□□□□□	Area scan
□□	Color
□□	Visible
□□□□	400 nm to 1000 nm
□□□	1,920 × 1,080 (2.00 MP)
□□□□□	Luxima Lux19HS
□□□□□□□□□	cmos
□□□□	Global shutter (GS)
□□□□□	19.2 × 10.8 mm (22.03 mm, Type 4/3)
□□□□	10.00 µm × 10.00 µm

□□□□	
□□□□□□	8-bit, 10-bit
RGB□□□□	bayer8, bayer10

□□□□□	
□□□□	2247 fps
□□□□ ROI□□	1920 x 1080 | 2247 fps, 1024 x 768 | 3152 fps, 640 x 480 | 5020 fps, 128 x 128 | 18177 fps, 1920 x 8 | 170578 fps, x | 170575 fps,
□□□□	2 µs to 1 s
□□	0.0 dB to 18.0 dB

I/O□□□

□□□□□IO	0 x LVDS input, 0 x LVDS output, 0 x TTL input, 0 x TTL output, 2 x 24V input, 0 x Open drain output,
□□□□□□□IO	0 x RS232 input, 0 x RS232 output, 0 x RS422 input, 0 x RS422 output,
□□□□□□	0 x Optical isolated input, 0 x Optical isolated input,
I/O□□	12-pin Hirose HR10A-10P-12S
□□□□	12 to 24VDC, Power over CoaXPress
□□	External: 13 W (typical)

□□□□

□□□□	-10 °C to 65 °C (□□)

□□□□

□□□□□L x W x H mm□	55 × 80 × 80
IP□□□□	IP30
□□□□	C-Mount
□□	500 g

□□

□□□□	cxp-12 with 4 connections
□□□□□	(micro-BNC)
□□□□	CoaXPress 2.0

□□□□ - □□□□

□□□□	external
□□□□	digital, analog
□□□□□□	roi, mirror-image

□□□□ - □□□□

□□□□/□□	external, trigger-over-cxp

Technical Drawing

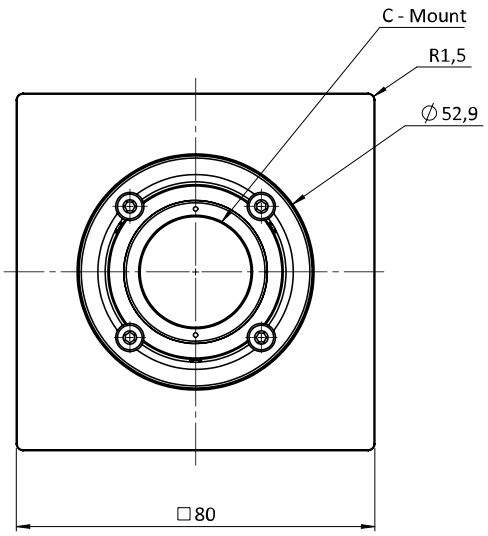

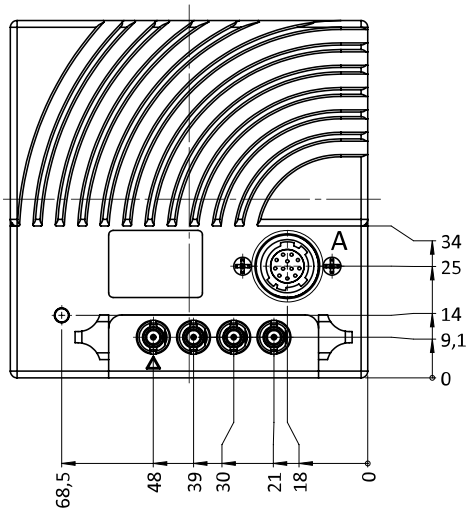

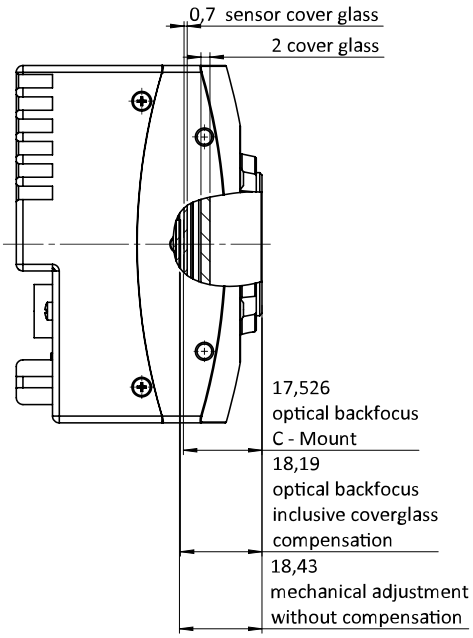

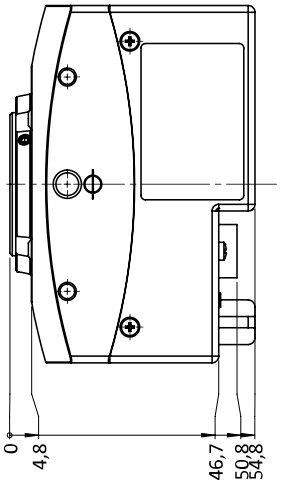

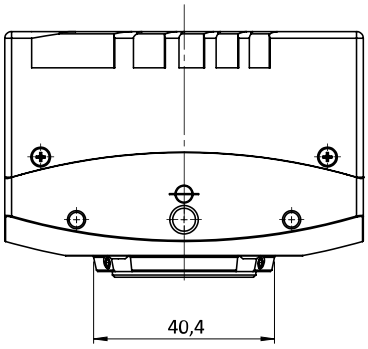

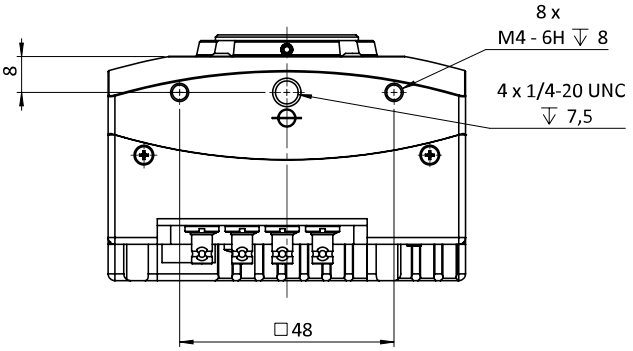

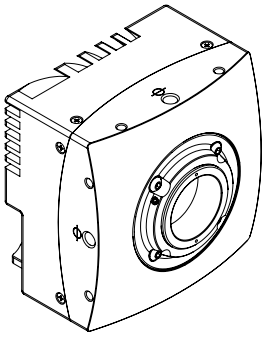

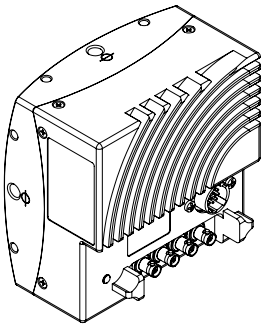

I/O pin assignment

	Pin	Signal	Pin	Signal
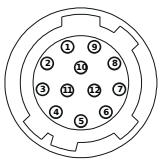	1 + 12	GND	6	IN0
	2 + 11	VCC (12- 24V)	7	IO_{GND}
	3	IO_{GND}	8	OUT1
	4	OUT0	9	IO_{GND}
	5	IO_{GND}	10	IN1