Allied Vision



HR 10GigE

hr65CXGE-G2

□□	
□□	hr65CXGE-G2
□□□□	F004148
□□□□	HR 10GigE
□□	Deleted

□□□	
□□□□□	Area scan
□□	Color
□□	Visible
□□□□	400 nm to 1000 nm
□□□	9,344 × 7,000 (65.00 MP)
□□□□□	Gpixel GMAX3265
□□□□□□□□□	cmos
□□□□	Global shutter (GS)
□□□□□	29.9 × 22.4 mm (37.36 mm, Type 2.3)
□□□□	3.20 µm × 3.20 µm

□□□□	
□□□□□□	8-bit, 12-bit
RGB□□□□	bayer8, bayer12

□□□□	
□□□□	65.6 dB
□□□	40 dB

Allied Vision

□□□□□

□□□□	17.4 fps
□□□□	22 µs to 60 s
□□	0.0 dB to 18.0 dB

I/O□□□

□□□□□IO	0 x LVDS input, 0 x LVDS output, 0 x TTL input, 0 x TTL output, 2 x 24V input, 4 x Open drain output,
□□□□□□□IO	1 x RS232 input, 1 x RS232 output, 0 x RS422 input, 0 x RS422 output,
□□□□□□	1 x Optical isolated input, 0 x Optical isolated input,
I/O□□	12-pin Hirose HR10A-10P-12S
□□□□	10 to 25VDC, Power over Ethernet (POE+, in option -P)
□□	External: 15 W (typical)

□□□□

□□□□□□□	-10 °C to 65 °C

□□□□

□□□□L x W x H mm□	76 × 70 × 70
□□□/□□□□	IR-Cut 680
IP□□□□	IP30
□□□□	M58x0.75
□□	420 g

□□□□FPGA

□□□□RAM□	448 MByte
□□□□□□□□□□□	32 MByte

□□

□□□□	10gige
□□□□□	(RJ-45)
□□□□	GigE Vision 2.0

□□□□ - □□□□

□□□□	manual, auto

固件功能 – 图像控制	
增益模式	auto, manual
白平衡模式	auto, manual
图像控制功能	roi, lut, mirror-image

固件功能 – 相机控制	
触发模式/同步	internal, software, external
相机控制功能	User Sets, POE, PWM(4), Sequencer,

Quantum Efficiency

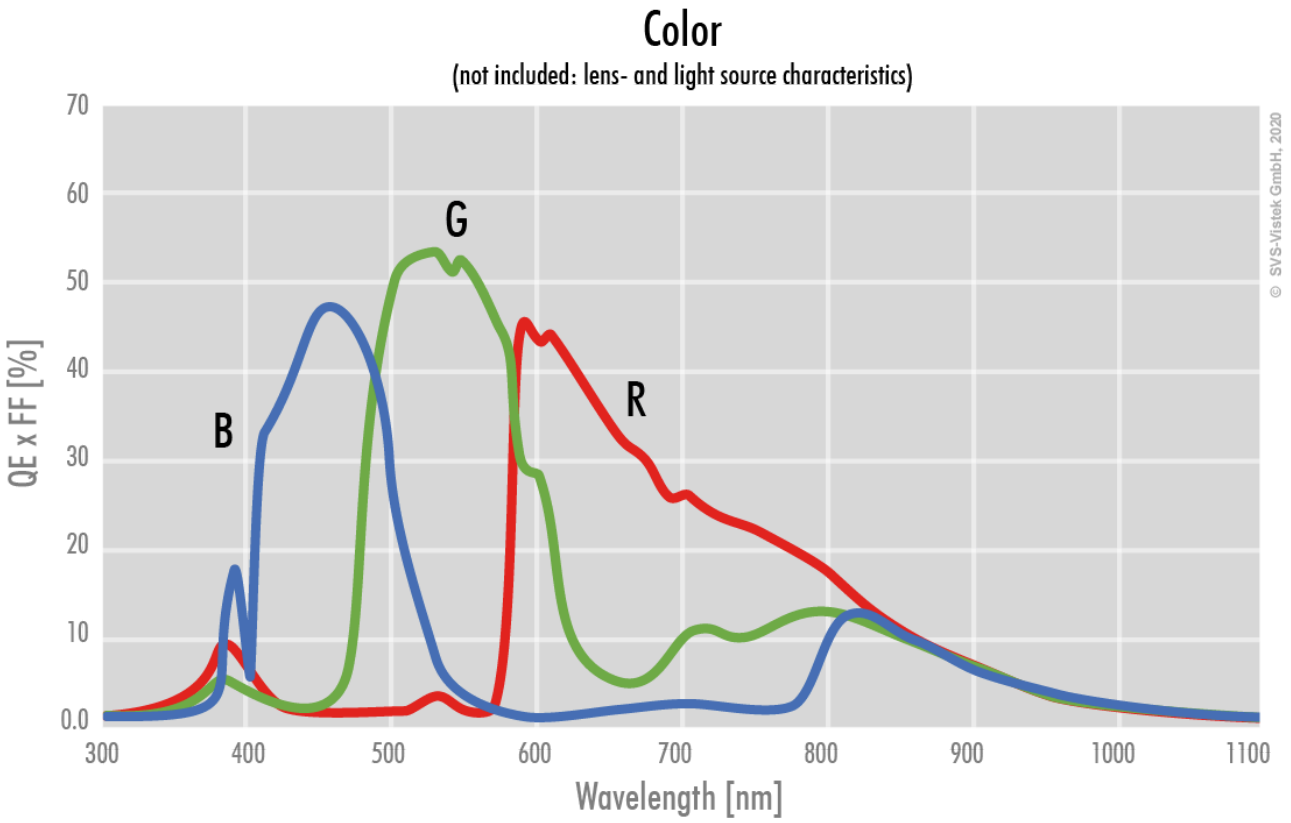

Allied Vision

Technical Drawing

front

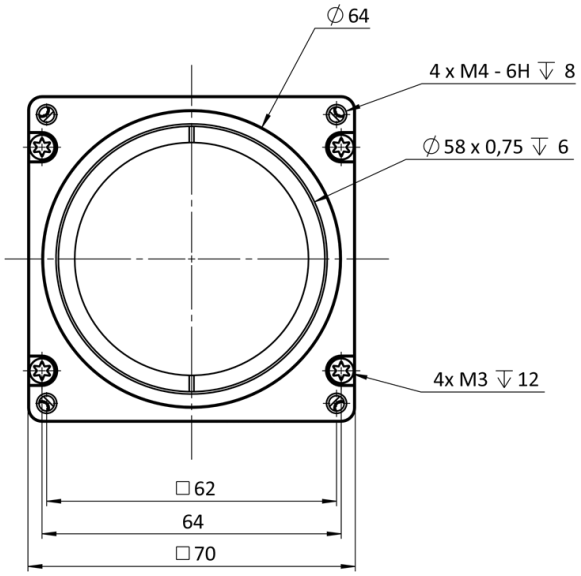

back

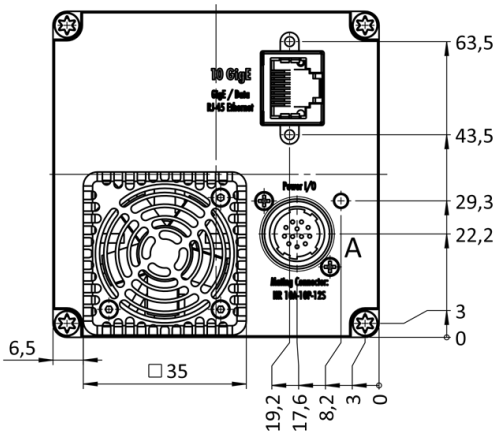

cross section

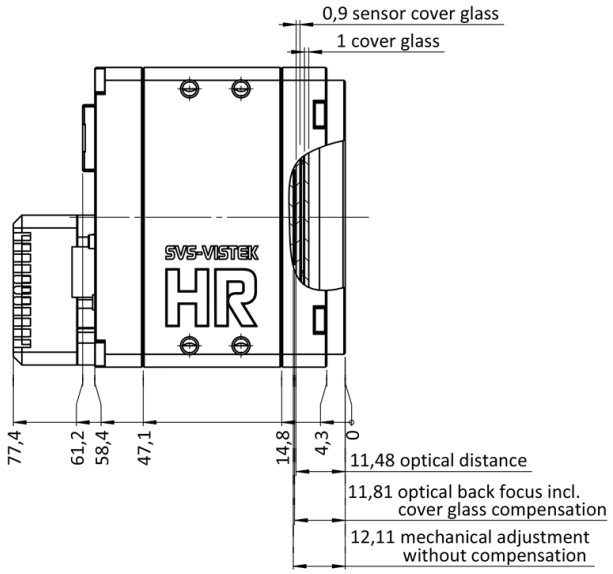

right side

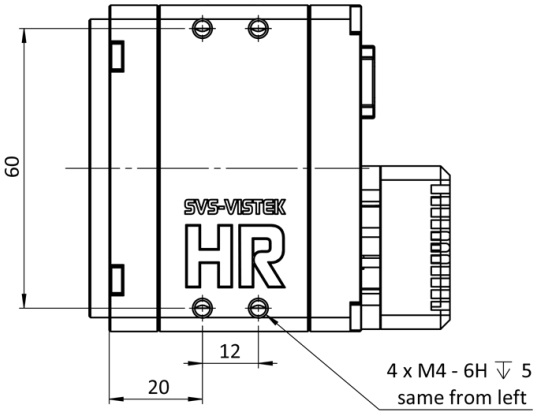

top

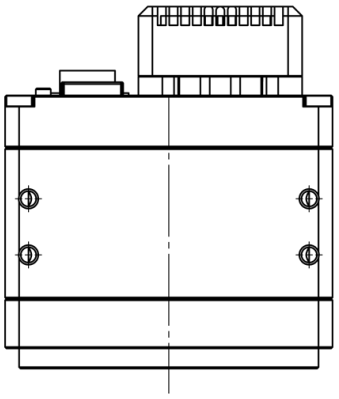

bottom

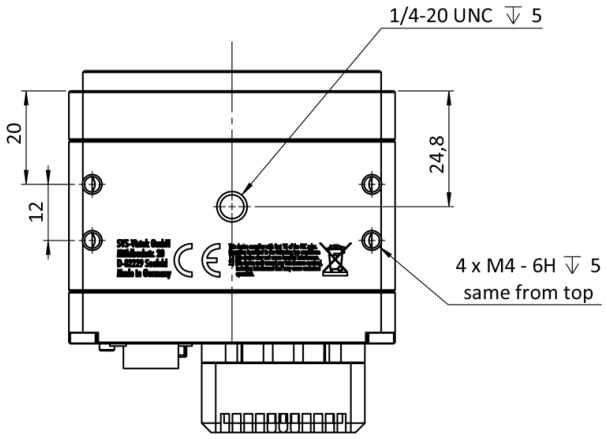

3D

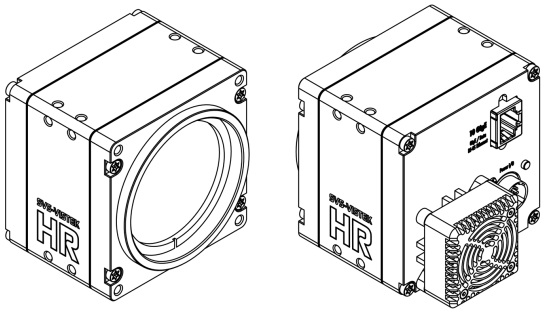

I/O pin assignment

Hirose 12 Pin

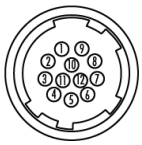

1	VIN –	(GND)
2	VIN +	(10 V to 25 V DC)
3	IN 4	(RXD RS232)
4	OUT 4	(TXD RS232)
5	IN 1	(0 - 24V)
6	IN 2	(0 - 24V)
7	OUT 1	(open drain)
8	OUT 2	(open drain)
9	IN 3 +	(opto In +)
10	IN 3 –	(opto In –)
11	OUT 3	(open drain)
12	OUT 0	(open drain)