Allied Vision



SHR 10GigE

shr661MXGE

□□	
□□	shr661MXGE
□□□□	F004143
□□□□	SHR 10GigE
□□	Available

□□□	
□□□□□	Area scan
□□	Mono
□□	Visible
□□□□	400 nm to 1000 nm
□□□	13,392 × 9,528 (127.60 MP)
□□□□□	Sony IMX661
□□□□□□□□□	cmos
□□□□	Global shutter (GS)
□□□□□	46.2 × 32.87 mm (56.7 mm, Type 3.6)
□□□□	3.45 µm × 3.45 µm

□□□□	
□□□□□□	8-bit, 12-bit
□□□□□□	mono8, mono12packed

□□□□	
□□□□	74.4 dB
□□□	41.5 dB

□□□□□

□□□□	8.2 fps
□□□□	163 µs to 60 s
□□	0.0 dB to 36.0 dB

I/O□□□

□□□□□IO	0 x LVDS input, 0 x LVDS output, 0 x TTL input, 0 x TTL output, 2 x 24V input, 4 x Open drain output,
□□□□□□□IO	1 x RS232 input, 1 x RS232 output, 0 x RS422 input, 0 x RS422 output,
□□□□□□	1 x Optical isolated input, 0 x Optical isolated input,
I/O□□	12-pin Hirose HR10A-10P-12S
□□□□	10 to 25VDC, Power over Ethernet (POE+, in option -P)
□□	External: 18 W (typical)

□□□□

□□□□□□□	-10 °C to 60 °C

□□□□

□□□□L x W x H mm□	83 × 80 × 80
□□□/□□□□	Borofloat B270i - AR coating
IP□□□□	IP30
□□□□	M72x0.75
□□	580 g

□□□□FPGA

□□□□□□□□□□□	32 MByte

□□

□□□□	10gige
□□□□□	(RJ-45)
□□□□	GigE Vision 2.0

□□□□ - □□□□

□□□□	manual, auto, external
□□□□	auto, manual

□□□□ - □□□□

□□□□□□□	lut, mirror-image, dpc, shading-correction, ffc

□□□□ - □□□□

□□□□/□□	internal, software, external
□□□□□□□	User Sets, POE, PWM(4), Sequencer,

Quantum Efficiency

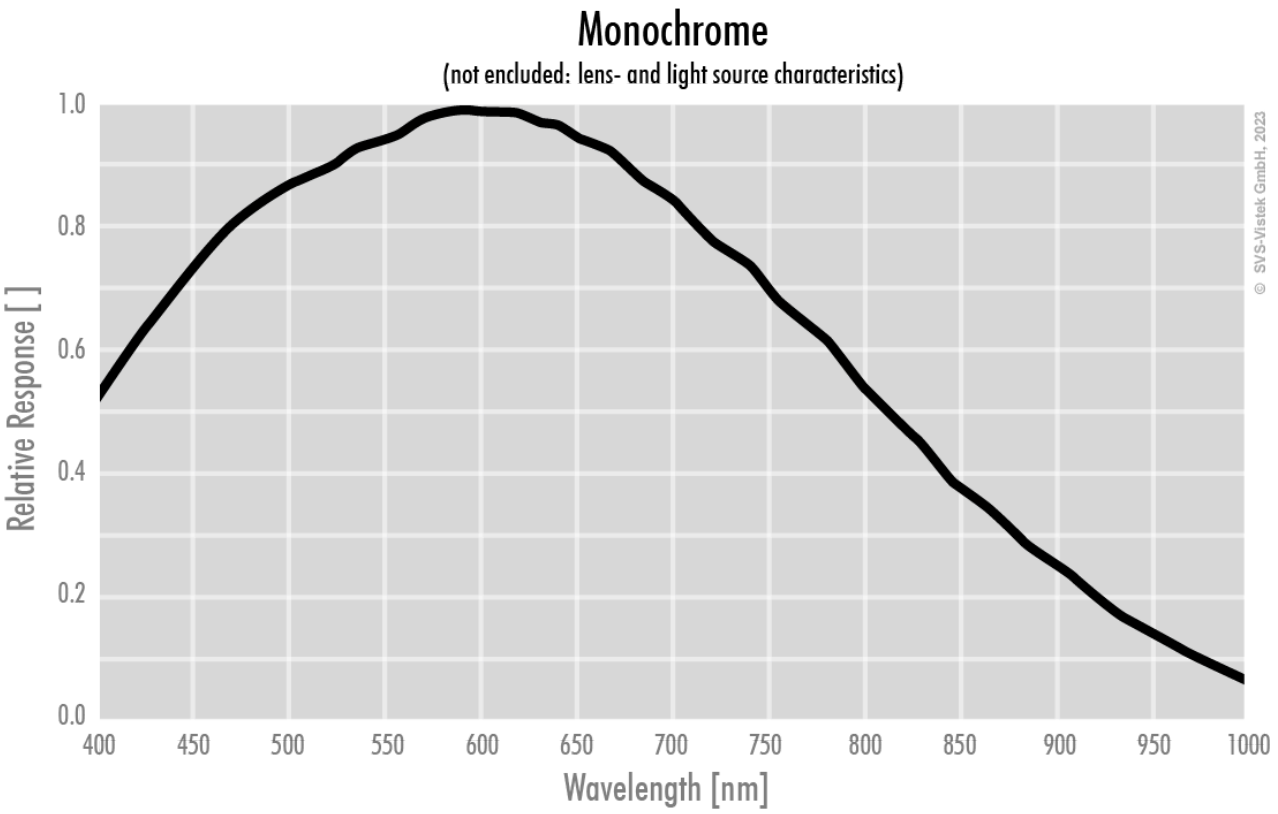

Allied Vision

Technical Drawing

front

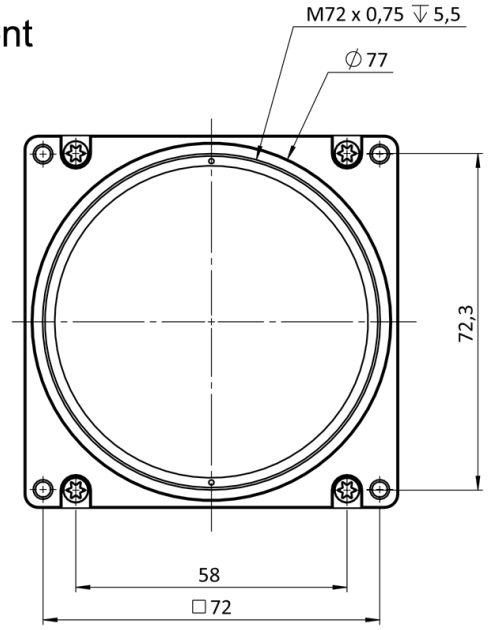

back

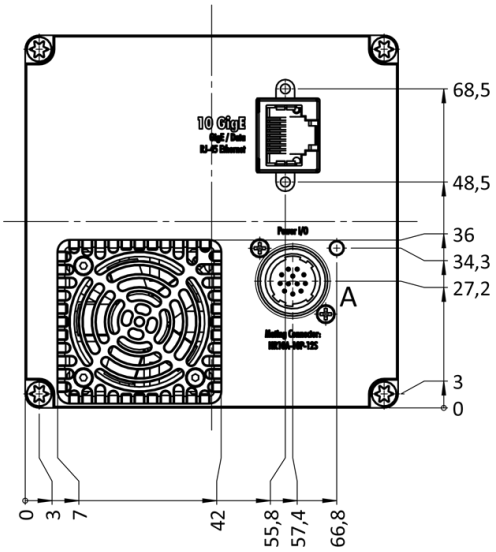

cross section

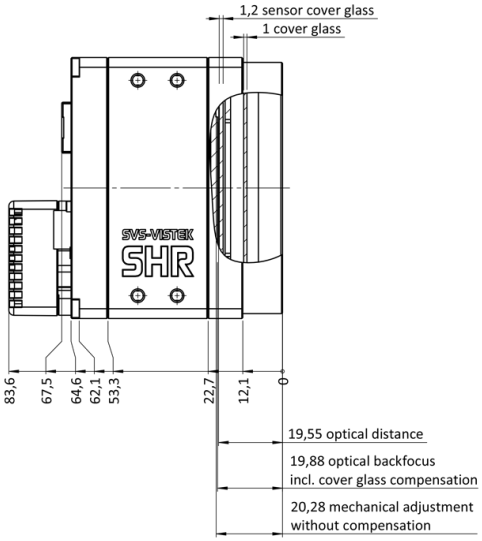

right side

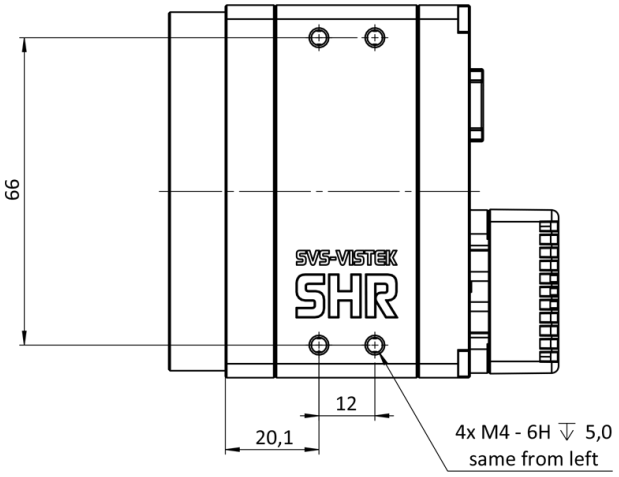

top

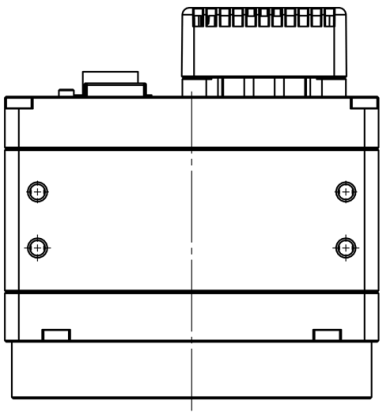

bottom

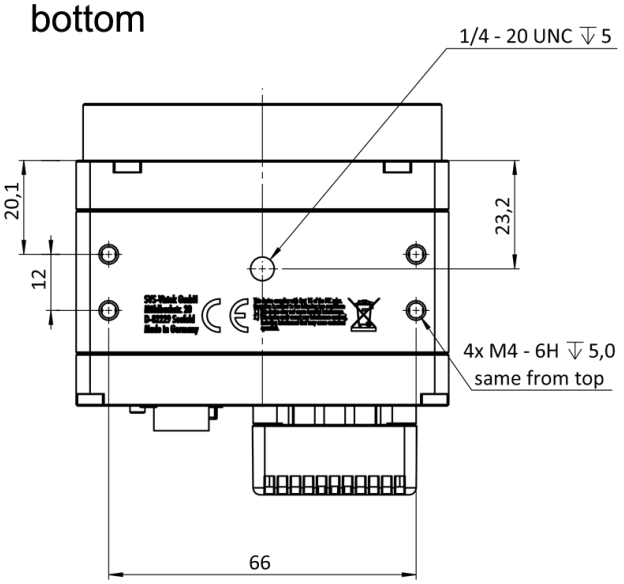

3D

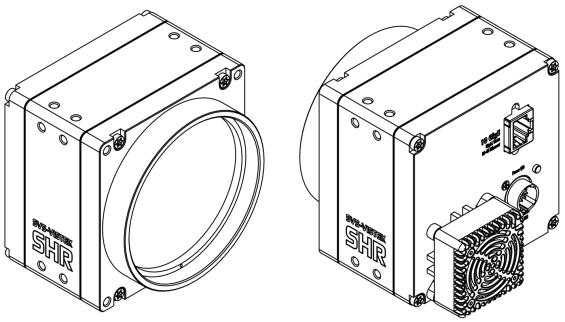

I/O pin assignment

Hirose 12 Pin

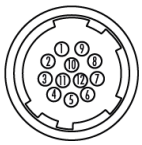

1	VIN –	(GND)	7	OUT 1	(open drain)
2	VIN +	(10 V to 25 V DC)	8	OUT 2	(open drain)
3	IN 4	(RXD RS232)	9	IN 3 +	(opto In +)
4	OUT 4	(TXD RS232)	10	IN 3 –	(opto In –)
5	IN 1	(0 - 24V)	11	OUT 3	(open drain)
6	IN 2	(0 - 24V)	12	OUT 0	(open drain)