FXO CoaXPress

fxo546MCX



□□	
□□	fxo546MCX
□□□□	F002154
□□□□	FXO CoaXPress
□□	Available

□□□	
□□□□□	Area scan
□□	Mono
□□	Visible
□□□□	400 nm to 1000 nm
□□□	2,832 × 2,840 (8.00 MP)
□□□□□	Sony IMX546
□□□□□ (□□)	cmos
□□□□	Global shutter (GS)
□□□□□	7.76 × 7.78 mm (10.99 mm, Type 2/3)
□□□□	2.74 µm × 2.74 µm

□□□□	
□□□□□	8-bit, 12-bit
□□□□□□	mono8, mono12

□□□□□	
□□□□□	88 fps
□□□□	7 µs to 60 s
□□	0.0 dB to 48.0 dB

I/O □□□

□□□□	0 x LVDS input, 0 x LVDS output, 0 x TTL input, 0 x TTL output, 2 x 24V input, 4 x Open drain output,
□□□□□□	1 x RS232 input, 1 x RS232 output, 0 x RS422 input, 0 x RS422 output,
□□□□	1 x Optical isolated input, 0 x Optical isolated input,
I/O □□□	12-pin Hirose HR10A-10P-12S
□□□□	10 to 25VDC, Power over CoaXPress
□□	External: 8 W (typical)

□□□□

□□□□ (□□)	-10 °C to 65 °C

□□□□

□□□□ (□ x □ x □ mm)	70 × 50 × 50
□□□/□□□□	K9 - AR coating - 400-850nm
□□□□	IP30
□□□□	C-Mount
□□	240 g

□□□□□□ FPGA

□□□□□□□ (Flash)	32 MByte

□□

□□□□	cxp-12 with 1 connection
□□□□□	(micro-BNC)
□□□□	CoaXPress 2.0

FW □□ – □□□□

□□□□	manual, auto, external
□□□□	auto, manual
□□□□□□	roi, lut, mirror-image, dpc, shading-correction, ffc

FW □□ – □□□□

□□□□/□□	internal, software, external
□□□□□□	PoCxP, User Sets, PWM(4), Sequencer,

□□□□

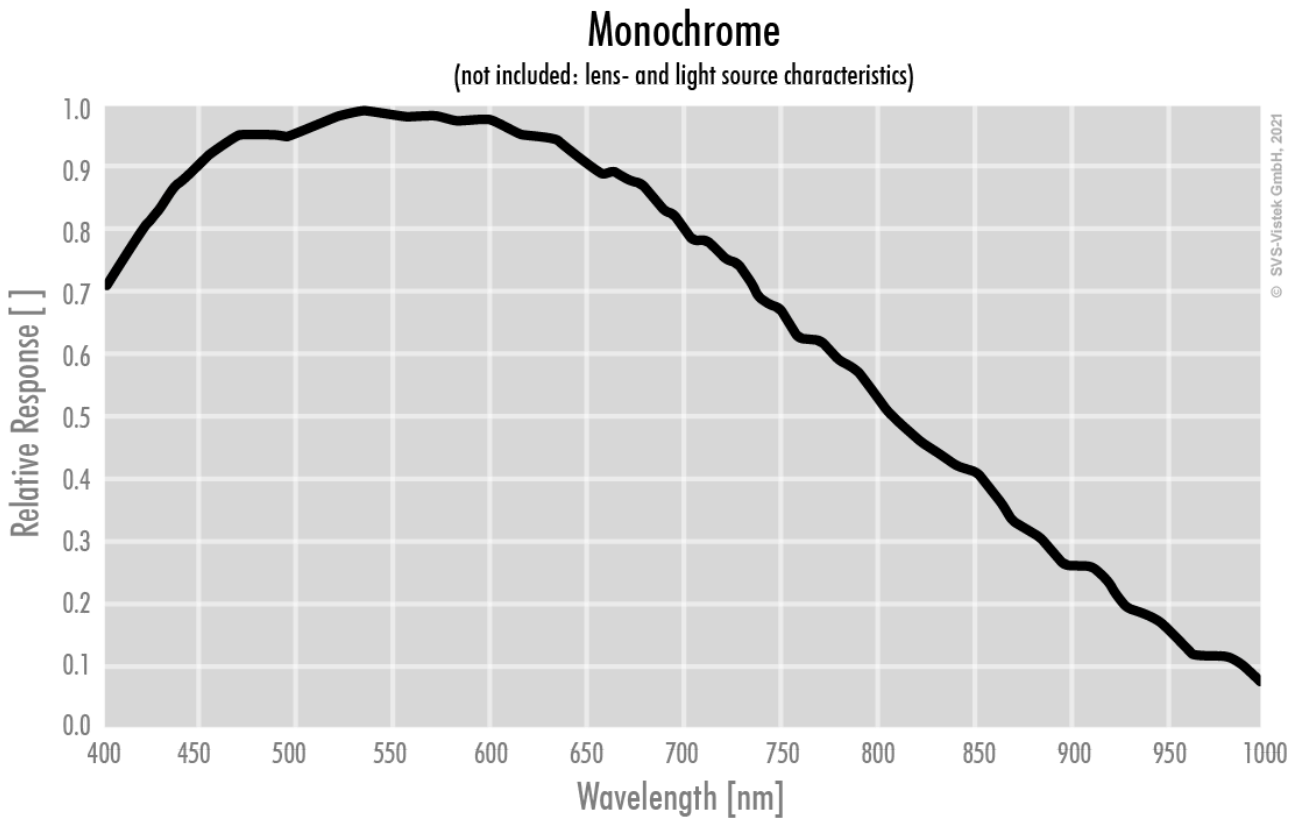
Monochrome
(not included: lens- and light source characteristics)
Relative Response [ ]
1.0
0.9
0.8
0.7
0.6
0.5
0.4
0.3
0.2
0.1
0.0
400
450
500
550
600
650
700
750
800
850
900
950
1000
Wavelength [nm]
© SVS-Vistek GmbH, 2021

□□□□

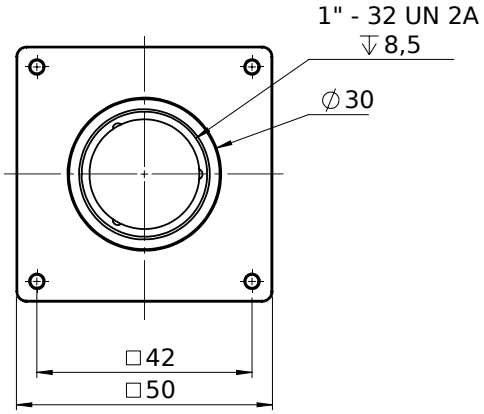
1" - 32 UN 2A
8,5
∅30
□42
□50

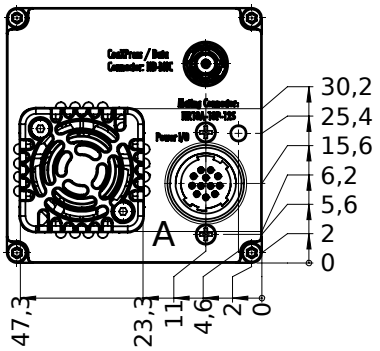
30,2
25,4
15,6
6,2
5,6
2
0
A
47,3
23,3
11
4,6
2
0

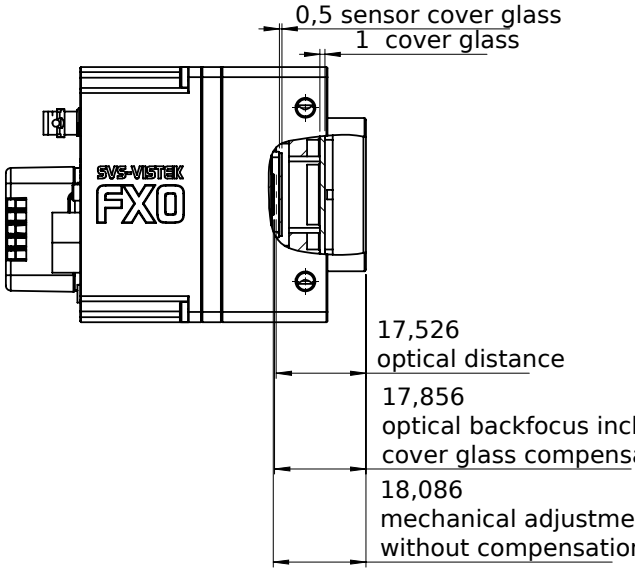
0,5 sensor cover glass
1 cover glass
SVS-VISTEK
FXO
17,526
optical distance
17,856
optical backfocus incl
cover glass compens
18,086
mechanical adjustme
without compensatio

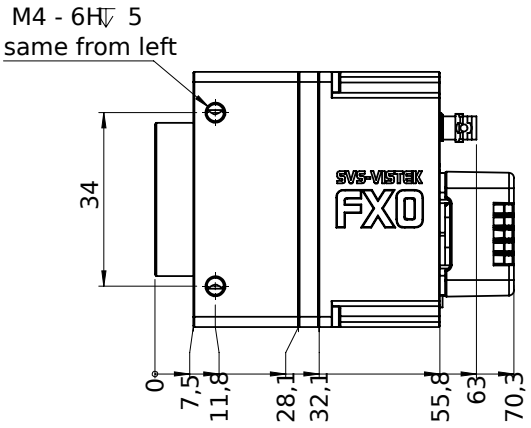
M4 - 6H 5
same from left
34
SVS-VISTEK
FXO
0
7,5
11,8
28,1
32,1
55,8
63
70,3

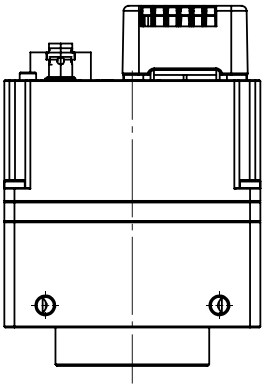

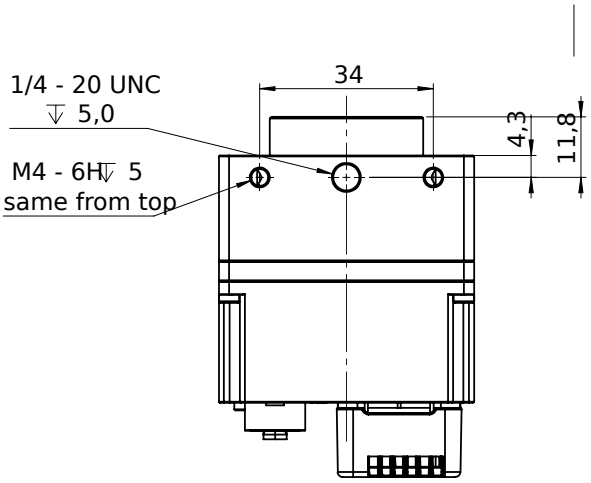

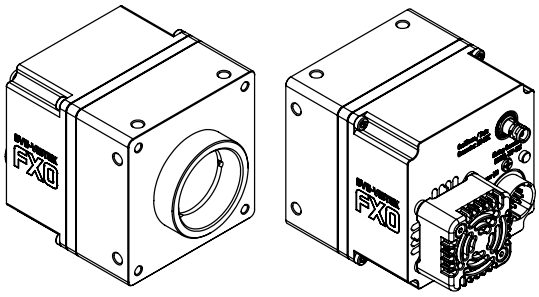

I/O □□□□

Hirose 12 Pin

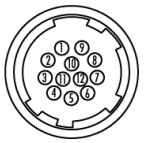

1	VIN –	(GND)	7	OUT 1	(open drain)
2	VIN +	(10 V to 25 V DC)	8	OUT 2	(open drain)
3	IN 4	(RXD RS232)	9	IN 3 +	(opto In +)
4	OUT 4	(TXD RS232)	10	IN 3 –	(opto In –)
5	IN 1	(0 - 24V)	11	OUT 3	(open drain)
6	IN 2	(0 - 24V)	12	OUT 0	(open drain)