Allied Vision



HR Camera Link

hr49MCL

□□	
□□	hr49MCL
□□□□	F004136
□□□□	HR Camera Link
□□	Available

□□□	
□□□□□	Area scan
□□	Mono
□□	Visible
□□□□	400 nm to 1000 nm
□□□	7,008 × 7,000 (49.00 MP)
□□□□□	Gpixel GMAX3265-49
□□□□□ (□□)	cmos
□□□□	Global shutter (GS)
□□□□□	22.43 × 22.4 mm (31.7 mm, Type 2.3)
□□□□	3.20 µm × 3.20 µm

□□□□	
□□□□□	8-bit, 10-bit
□□□□□□	mono8, mono10

□□□□□	
□□□□□	17 fps
□□□□	21 µs to 60 s
□□	0.0 dB to 18.0 dB

I/O □□□

□□□□	0 x LVDS input, 0 x LVDS output, 0 x TTL input, 0 x TTL output, 2 x 24V input, 4 x Open drain output,
□□□□□□	1 x RS232 input, 1 x RS232 output, 0 x RS422 input, 0 x RS422 output,
□□□□	1 x Optical isolated input, 0 x Optical isolated input,
I/O □□□	12-pin Hirose HR10A-10P-12S
□□□□	10 to 25VDC
□□	External: 9 W (typical)

□□□□

□□□□	-10 °C to 45 °C (□□□□□□)

□□□□

□□□□ (□ x □ x □ mm)	76 × 70 × 70
□□□□	IP30
□□□□	M58x0.75
□□	420 g

□□□□□□ FPGA

□□□□□□□ (Flash)	32 MByte

□□

□□□□	camera link 80-bit
□□□□□	SDR

FW □□ – □□□□

□□□□	manual, auto, external
□□□□	auto, manual
□□□□□□	lut, mirror-image, dpc, shading-correction, ffc

FW □□ – □□□□

□□□□/□□	internal, software, external
□□□□□□	User Sets, PWM(4), Sequencer,

□□□□

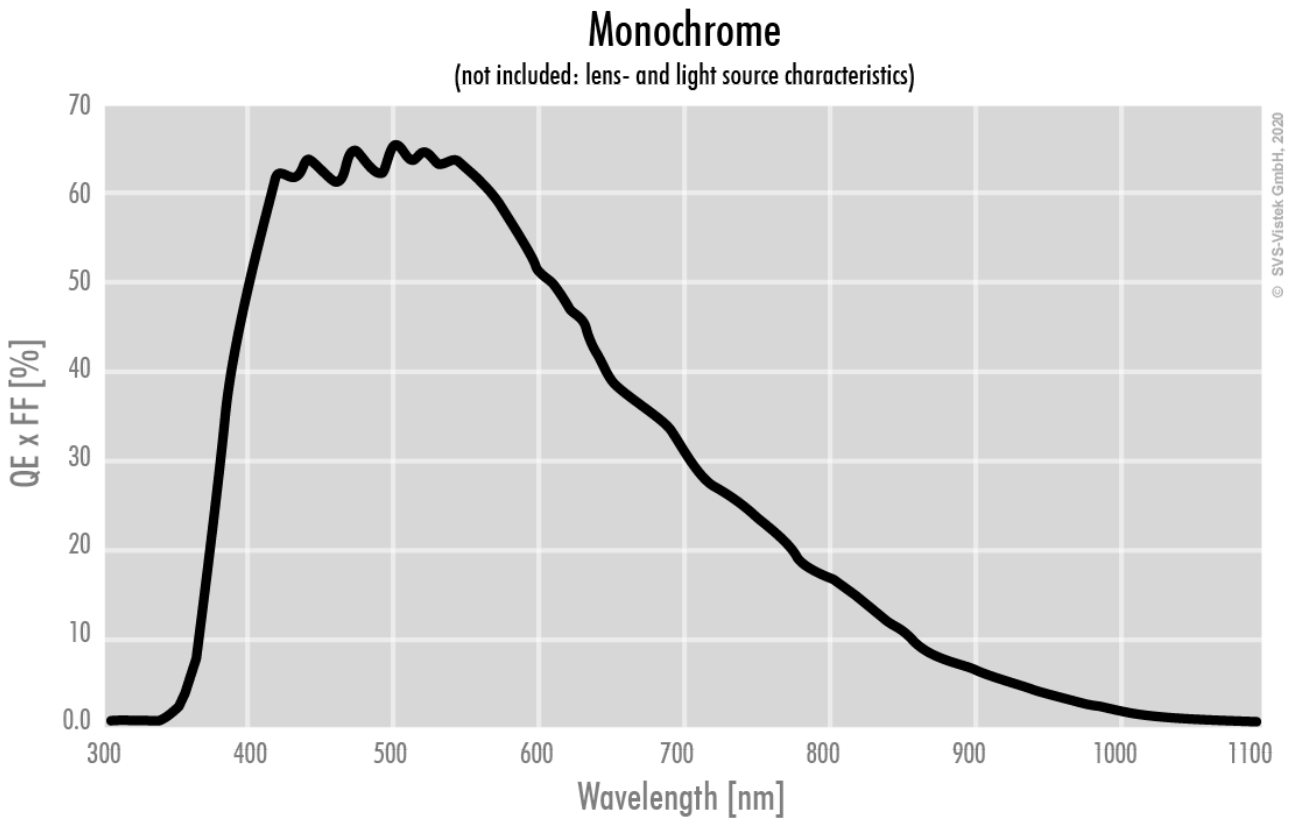
Monochrome
(not included: lens- and light source characteristics)
QE x FF [%]
70
60
50
40
30
20
10
0.0
300
400
500
600
700
800
900
1000
1100
Wavelength [nm]
© SVS-Vistek GmbH, 2020

□□□□

front

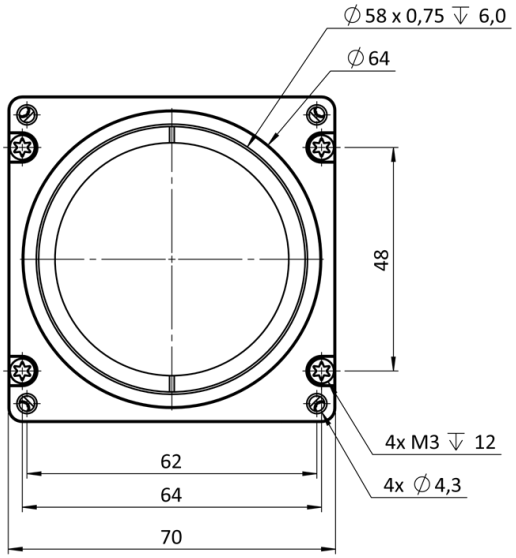

back

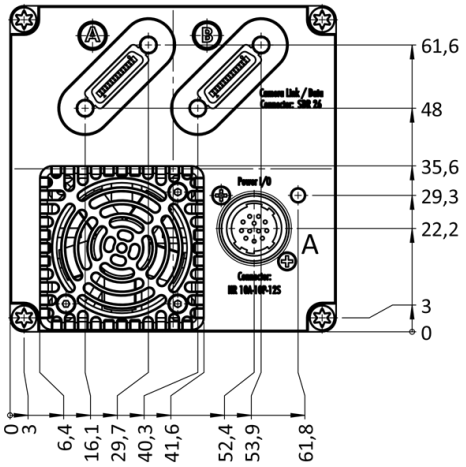

cross section

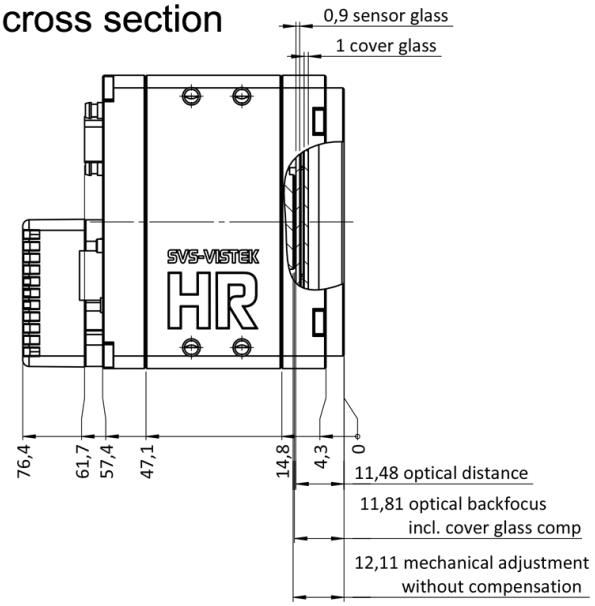

right side

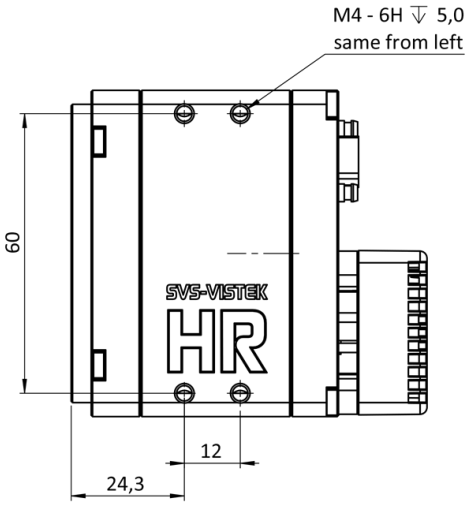

top

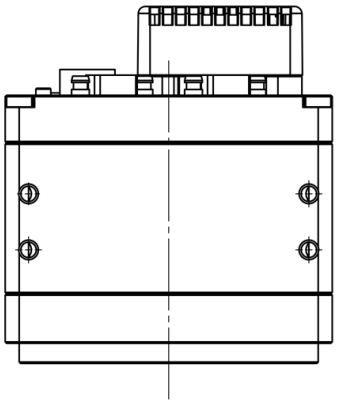

bottom

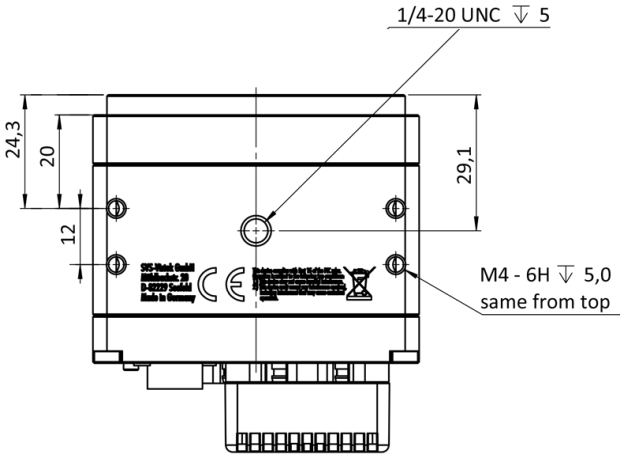

3D

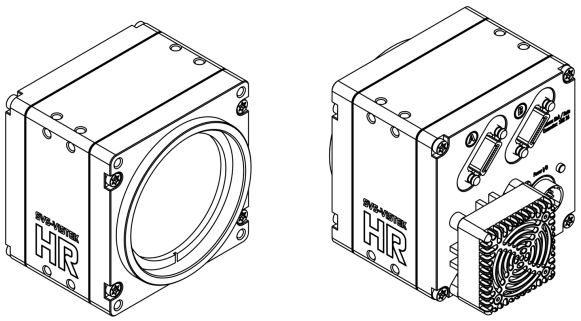

I/O □□□□

Hirose 12 Pin

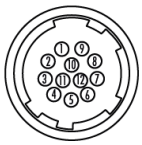

1	VIN –	(GND)	7	OUT 1	(open drain)
2	VIN +	(10 V to 25 V DC)	8	OUT 2	(open drain)
3	IN 4	(RXD RS232)	9	IN 3 +	(opto In +)
4	OUT 4	(TXD RS232)	10	IN 3 –	(opto In –)
5	IN 1	(0 - 24V)	11	OUT 3	(open drain)
6	IN 2	(0 - 24V)	12	OUT 0	(open drain)