Allied Vision



HR CoaXPress

hr65MCX

□□	
□□□	hr65MCX
□□□□□	F004137
□□□□□□	HR CoaXPress
□□□□□	Available

□□□□	
□□□□□□□	Area scan
□□□	Mono
□□□□□	Visible
□□□□□□□	400 nm to 1000 nm
□□□	9,344 × 7,000 (65.00 MP)
□□□□□□□	Gpixel GMAX3265
□□□□□□□□□□	cmos
□□□□□□□□	Global shutter (GS)
□□□□□□□	29.9 × 22.4 mm (37.36 mm, Type 2.3)
□□□□□□□	3.20 µm × 3.20 µm

□□□□□□□□□□	
□□□□□□□□□	8-bit, 10-bit
□□□□□□□□□□□□□□□	mono8, mono10

□□□□□□□□	
□□□□□□□□□	65.6 dB
SNR	40 dB

□□□□□□□□□□

□□□□□□□□□□	35.5 fps
□□□□	12 µs to 60 s
□□□	0.0 dB to 18.0 dB

I/O□□□

□□□□	0 x LVDS input, 0 x LVDS output, 0 x TTL input, 0 x TTL output, 2 x 24V input, 4 x Open drain output,
□□□□□□□□	1 x RS232 input, 1 x RS232 output, 0 x RS422 input, 0 x RS422 output,
□□□□	1 x Optical isolated input, 0 x Optical isolated input,
I/O□□□□	12-pin Hirose HR10A-10P-12S
□□	10 to 25VDC, Power over CoaXPress
□□□□	External: 10.5 W (typical)

□□□□

□□□□	-10 °C to 65 °C (□□)

□□□□□

□□□□□L x W x H mm□	76 × 70 × 70
□□□□□/□□□□□	N-BK7 - AR coating
IP□□	IP30
□□□□□□□	M58x0.75
□□	420 g

□□□□□□□□□FPGA

□□□□□□□□□□□□□□□	160 MByte

□□□□□□□□

□□□□□□□□□□□□□	cxp-6 with 4 connections
□□□□□□□□□□□□□	(Din1.0/2.3)
□□□□□□□	CoaXPress 1.0

FW□□ - □□□□

□□□□□	manual, auto, external
□□□□□□	auto, manual

FW□□ - □□□□

□□□□□□□	roi, lut, mirror-image, dpc, shading-correction, ffc

FW□□ - □□□□□

□□□□□□□□/□□	internal, software, external
□□□□□□□□	PoCxP, User Sets, PWM(4), Sequencer,

Quantum Efficiency

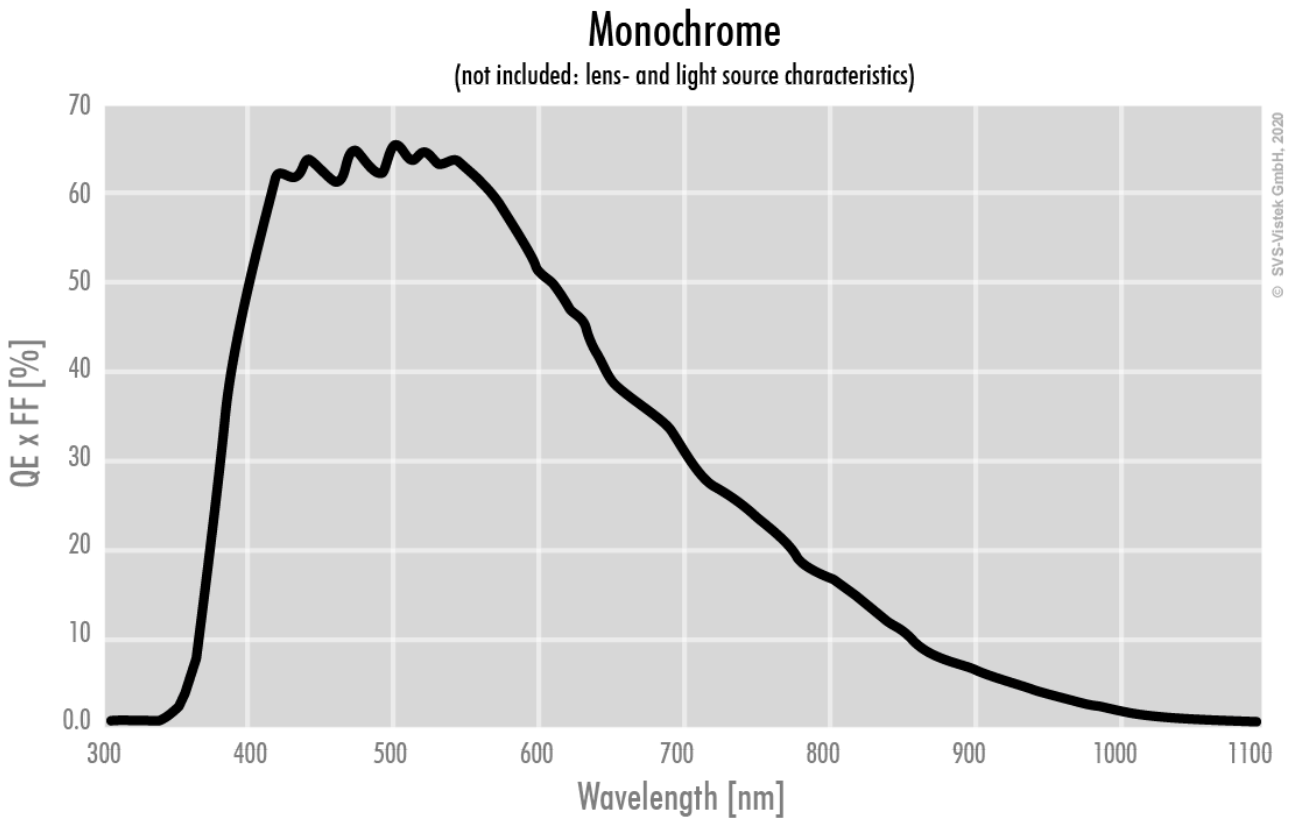

Allied Vision

Technical Drawing

front

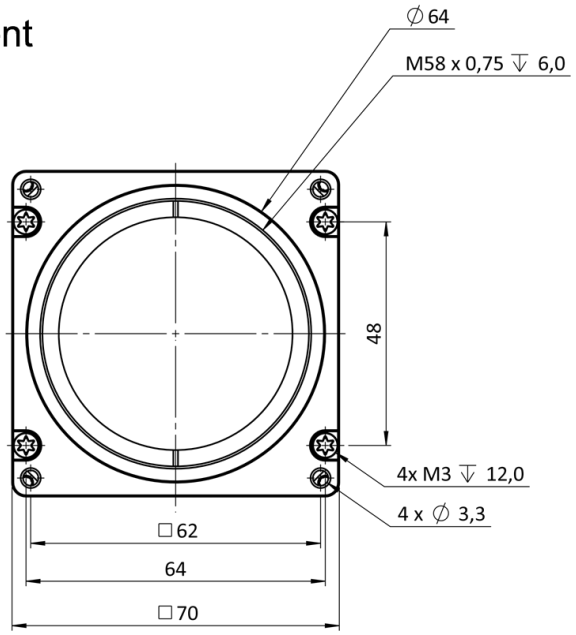

back

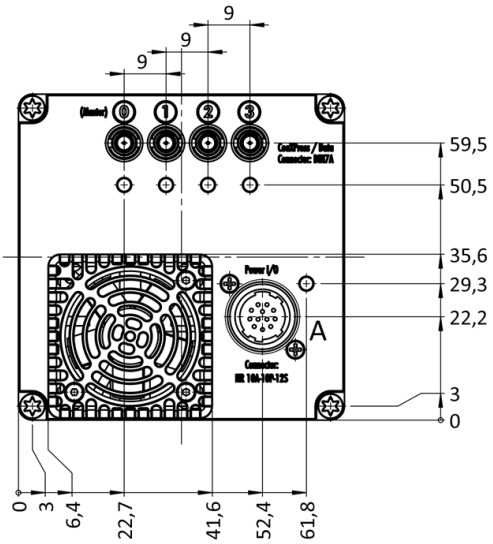

cross section

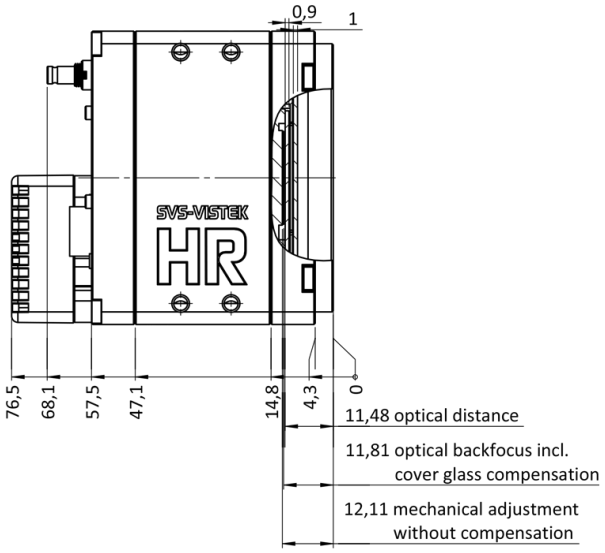

right side

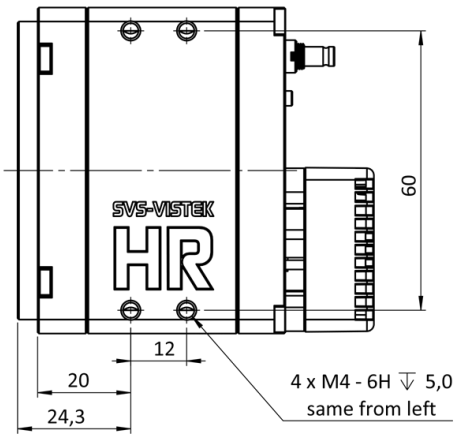

top

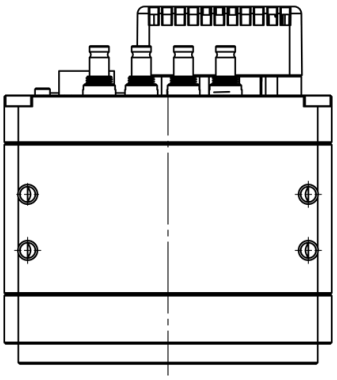

bottom

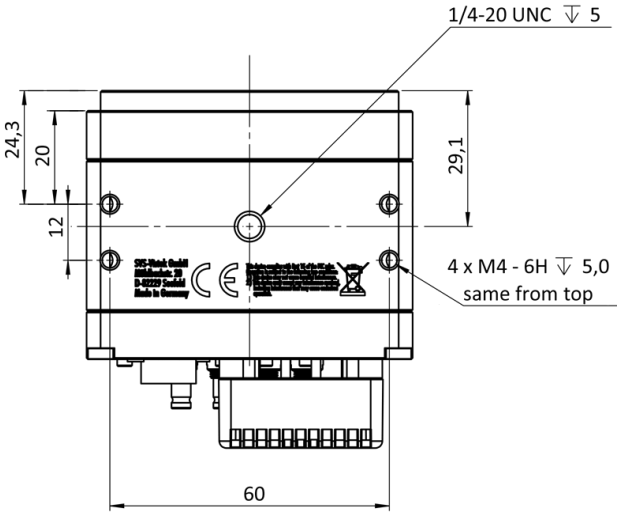

3D

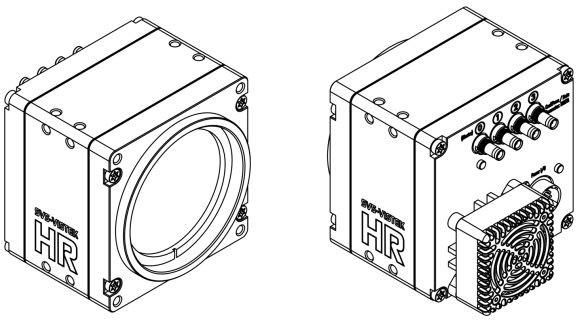

I/O pin assignment

Hirose 12 Pin

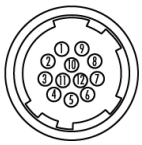

1	VIN –	(GND)	7	OUT 1	(open drain)
2	VIN +	(10 V to 25 V DC)	8	OUT 2	(open drain)
3	IN 4	(RXD RS232)	9	IN 3 +	(opto In +)
4	OUT 4	(TXD RS232)	10	IN 3 –	(opto In –)
5	IN 1	(0 - 24V)	11	OUT 3	(open drain)
6	IN 2	(0 - 24V)	12	OUT 0	(open drain)