EXO USB3

exo540MU3



□□	
□□	exo540MU3
□□□□	F002077
□□□□	EXO USB3
□□	Available

□□□	
□□□□□	Area scan
□□	Mono
□□	Visible
□□□□	400 nm to 1000 nm
□□□	5,320 × 4,600 (24.50 MP)
□□□□□	Sony IMX540
□□□□□□□□□	cmos
□□□□	Global shutter (GS)
□□□□□	14.58 × 12.6 mm (19.27 mm, Type 1.2)
□□□□	2.74 µm × 2.74 µm

□□□□	
□□□□□□	8-bit, 12-bit
□□□□□□	mono8, mono12packed

□□□□	
□□□□	72 dB
□□□	39.17 dB

□□□□□

□□□□	15 fps
□□□□	28 µs to 60 s
□□	0.0 dB to 48.0 dB

I/O□□□

□□□□□IO	0 x LVDS input, 0 x LVDS output, 0 x TTL input, 0 x TTL output, 2 x 24V input, 4 x Open drain output,
□□□□□□□IO	1 x RS232 input, 1 x RS232 output, 0 x RS422 input, 0 x RS422 output,
□□□□□□	1 x Optical isolated input, 0 x Optical isolated input,
I/O□□	12-pin Hirose HR10A-10P-12S
□□□□	10 to 25VDC
□□	External: 4 W (typical)

□□□□

□□□□	-10 °C to 65 °C (□□)

□□□□

□□□□□L x W x H mm□	43 × 50 × 50
□□□/□□□□	K9 - AR coating - 400-850nm
IP□□□□	IP40
□□□□	C-Mount
□□	140 g

□□□□□FPGA

□□□□□RAM□	192 MByte
□□□□□□□□□□□□	32 MByte

□□

□□□□	usb3.0
□□□□□	(Micro-B)
□□□□	USB3 Vision

□□□□ - □□□□

□□□□	manual, auto, external

□□□□ - □□□□

□□□□	auto, manual
□□□□□□	roi, lut, mirror-image, dpc, shading-correction

□□□□ - □□□□

□□□□/□□	internal, software, external
□□□□□□	User Sets, PWM(4), Sequencer,

Quantum Efficiency

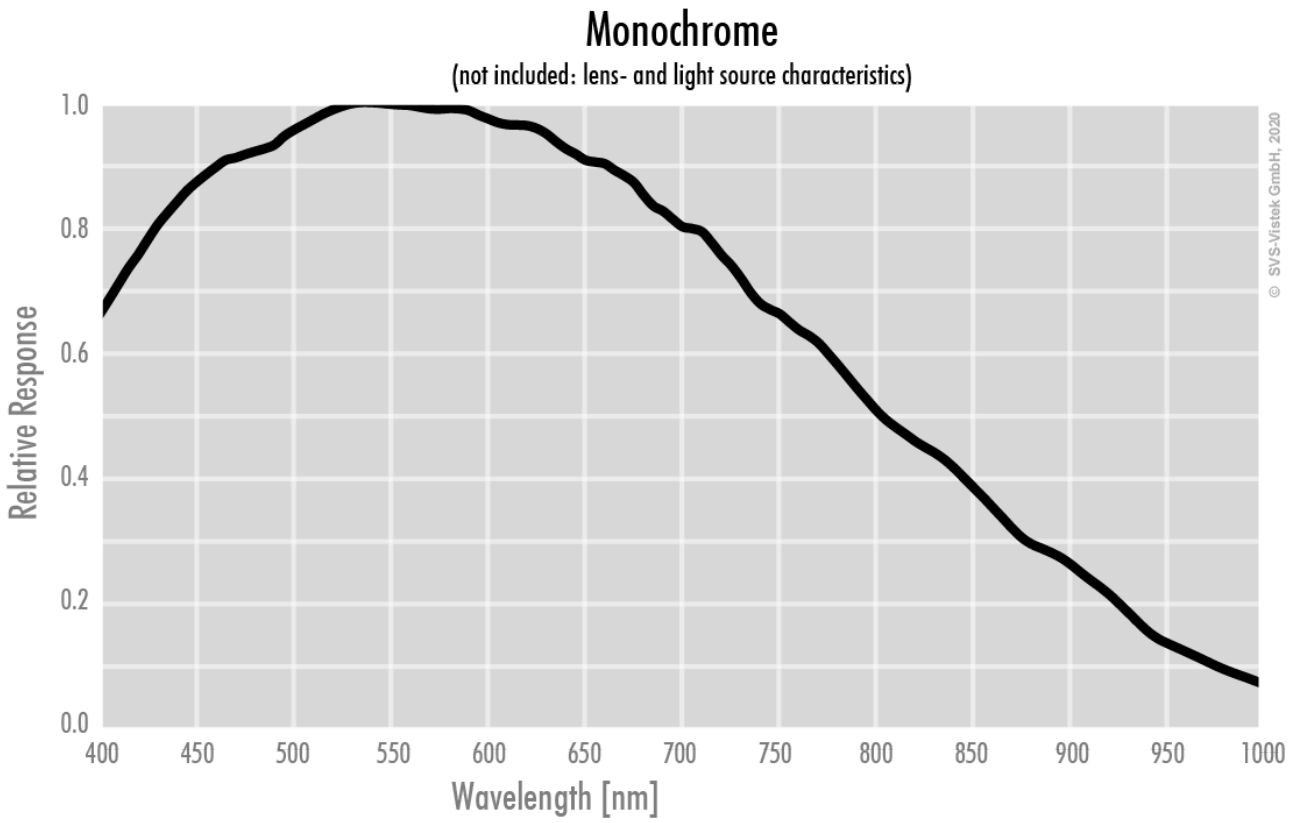

Allied Vision

Technical Drawing

front

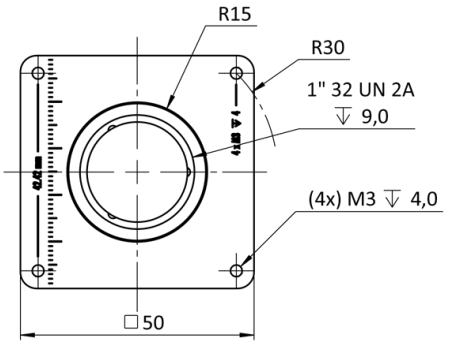

back

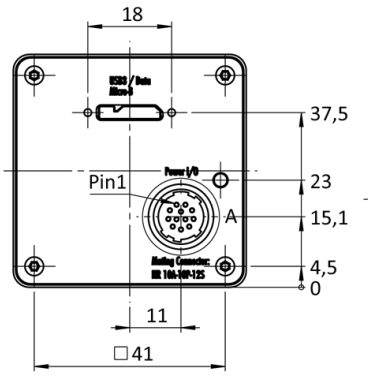

cross section

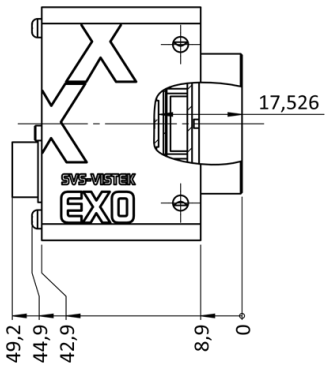

right side

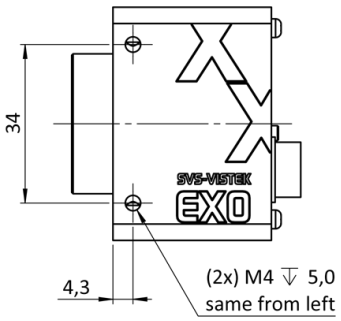

top

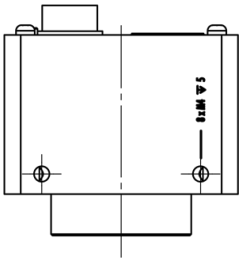

bottom

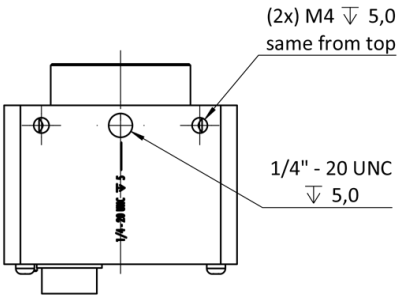

3D

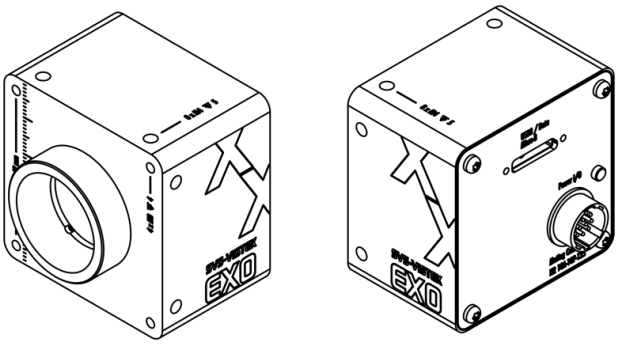

I/O pin assignment

Hirose 12 Pin

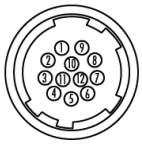

1	VIN –	(GND)
2	VIN +	(10 V to 25 V DC)
3	IN 4	(RXD RS232)
4	OUT 4	(TXD RS232)
5	IN 1	(0 - 24V)
6	IN 2	(0 - 24V)
7	OUT 1	(open drain)
8	OUT 2	(open drain)
9	IN 3 +	(opto In +)
10	IN 3 –	(opto In –)
11	OUT 3	(open drain)
12	OUT 0	(open drain)