Allied Vision



SHR 10GigE

shr461CXGE

□□	
□□	shr461CXGE
□□□□	F004108
□□□□	SHR 10GigE
□□	Discontinued

□□□	
□□□□□	Area scan
□□	Color
□□	Visible
□□□□	400 nm to 1000 nm
□□□	11,648 × 8,742 (101.80 MP)
□□□□□	Sony IMX461
□□□□□□□□□	cmos
□□□□	Rolling shutter (RS)
□□□□□	43.8 × 32.87 mm (54.76 mm, Type 3.4)
□□□□	3.76 µm × 3.76 µm

□□□□	
□□□□□□	8-bit, 12-bit, 16-bit
RGB□□□□	bayer8, bayer12, bayer16

□□□□	
□□□□	81.3 dB
□□□	46.8 dB

□□□□□

□□□□	8.7 fps
□□□□	60 µs to 60 s
□□	0.0 dB to 36.0 dB

I/O□□□

□□□□□IO	0 x LVDS input, 0 x LVDS output, 0 x TTL input, 0 x TTL output, 2 x 24V input, 4 x Open drain output,
□□□□□□□IO	1 x RS232 input, 1 x RS232 output, 0 x RS422 input, 0 x RS422 output,
□□□□□□	1 x Optical isolated input, 0 x Optical isolated input,
I/O□□	12-pin Hirose HR10A-10P-12S
□□□□	10 to 25VDC, Power over Ethernet (POE+, in option -P)
□□	External: 17 W (typical)

□□□□

□□□□	-10 °C to 45 °C (□□□□□□)

□□□□

□□□□L x W x H mm□	83 × 80 × 80
□□□/□□□□	Borofloat B270i - AR coating
IP□□□□	IP30
□□□□	M72x0.75
□□	580 g

□□

□□□□	10gige
□□□□□	(RJ-45)
□□□□	GigE Vision 2.0

□□□□ - □□□□

□□□□	manual, auto, external
□□□□	auto, manual
□□□□□	auto, manual
□□□□□□	lut, mirror-image, dpc, shading-correction, ffc

□□□□ - □□□□

□□□□/□□	internal, software, external
□□□□□□	User Sets, POE, PWM(4), Sequencer,

Quantum Efficiency

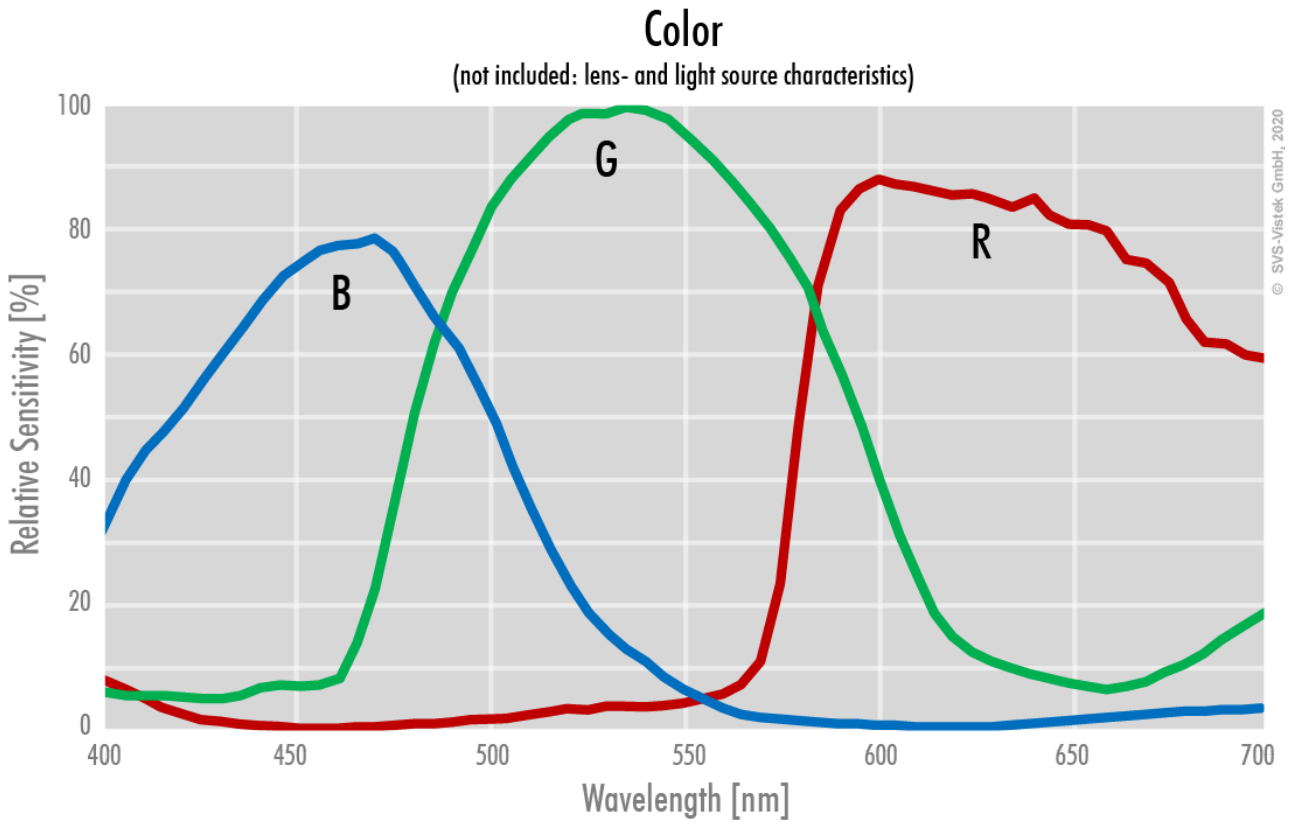

Technical Drawing

front

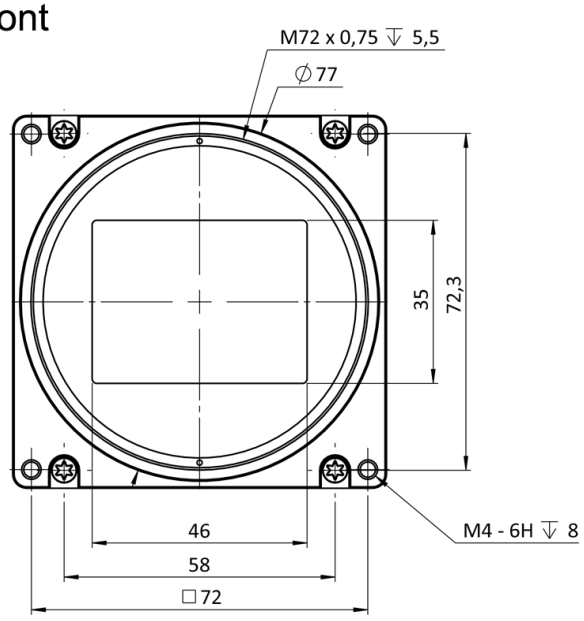

back

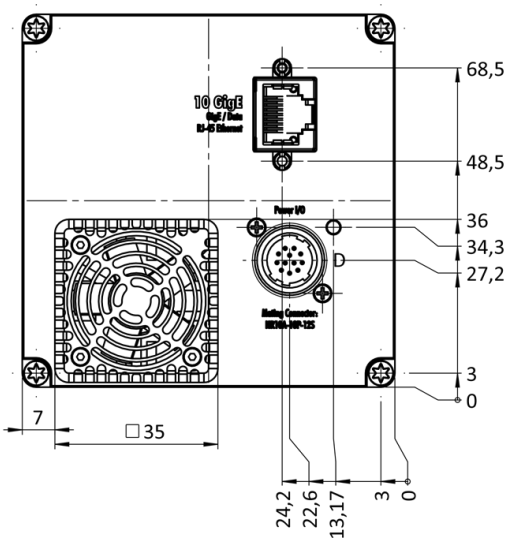

cross section

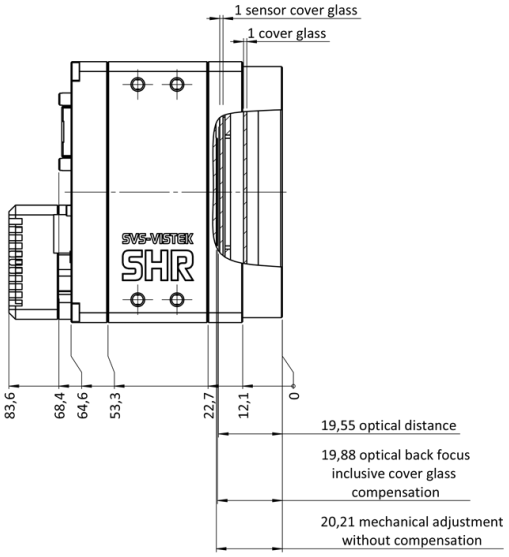

right side

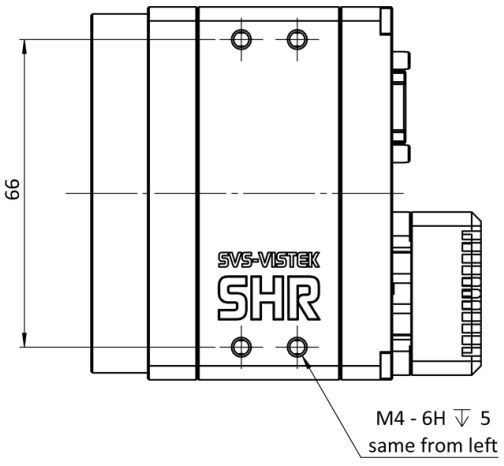

top

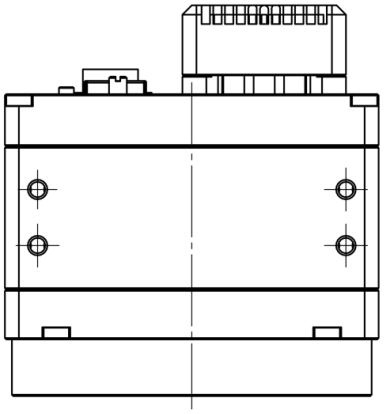

bottom

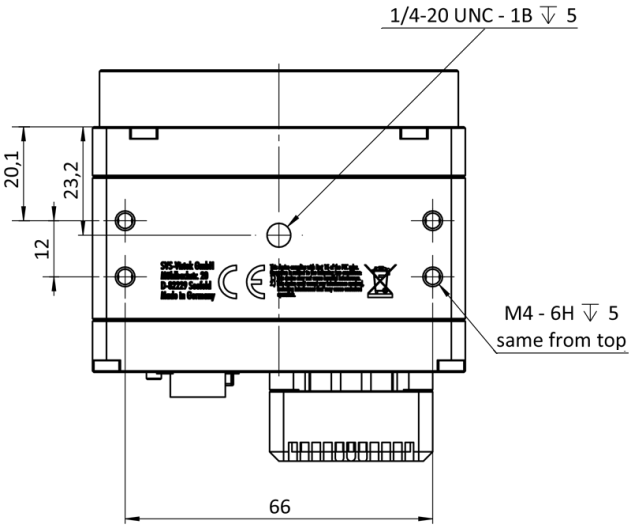

3D

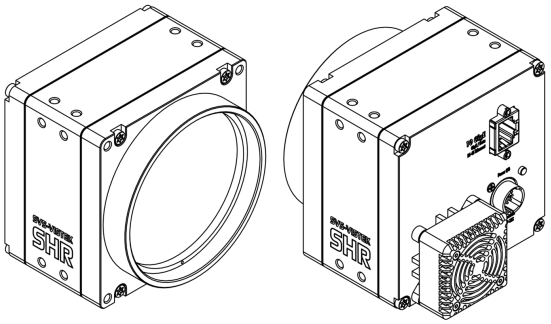

I/O pin assignment

Hirose 12 Pin

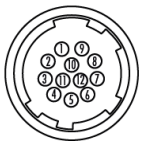

1	VIN –	(GND)	7	OUT 1	(open drain)
2	VIN +	(10 V to 25 V DC)	8	OUT 2	(open drain)
3	IN 4	(RXD RS232)	9	IN 3 +	(opto In +)
4	OUT 4	(TXD RS232)	10	IN 3 –	(opto In –)
5	IN 1	(0 - 24V)	11	OUT 3	(open drain)
6	IN 2	(0 - 24V)	12	OUT 0	(open drain)