SHR CoaXPress

shr461CCX

General

Model:	shr461CCX
Product code:	F004087
Product series:	SHR CoaXPress
Status:	Available

Sensor

Sensor type:	Area scan
Chroma:	Color
Spectrum:	Visible
Spectral range:	400 nm to 1000 nm
Resolution:	11,648 × 8,742 (101.80 MP)
Sensor model:	Sony IMX461
Sensor architecture (material):	cmos
Shutter type(s):	rolling-shutter
Sensor size:	43.8 × 32.87 mm (54.76 mm, 55mm (Type 3.4))
Pixel size:	3.76 µm × 3.76 µm

Pixel formats

Sensor bit depth:	8-Bit,10-Bit,12-Bit,16-Bit
RGB pixel formats:	bayer8, bayer10, bayer12, bayer16

Imaging performance

Dynamic range:	81.3 dB
SNR:	46.8 dB

Timing and gain

Max. frame rate:	8.7 fps
Exposure time:	60 µs to 60 s
Gain:	0.0 dB to 36.0 dB

I/Os and power

Non-isolated lines:	0 x LVDS input, 0 x LVDS output, 0 x TTL input, 0 x TTL output, 2 x 24V input, 4 x Open drain output,
Specific non-isolated lines:	1 x RS232 input, 1 x RS232 output, 0 x RS422 input, 0 x RS422 output,
Opto-isolated lines:	1 x Optical isolated input, 0 x Optical isolated input,
Power supply:	10 to 25VDC, Power over CoaXPress
Power consumption:	External: 14 W (typical)

Operating conditions

Operating temperature (housing):	-10 °C to 70 °C

Mechanical properties

Body dimensions (L x W x H in mm):	83 × 80 × 80
Filter/protection glass:	Borofloat B270i - AR coating
IP class:	IP30
Lens mount(s):	M72x0.75
Weight:	580 g

On-board memory and FPGA

Non-volatile memory (Flash):	160 MByte

Interfaces

Digital interface:	cxp-6 with 4 connections
Interface connector:	(Din1.0/2.3)

FW features - image control

Exposure modes:	Manual, Auto
Gain modes:	Auto, Manual
White balance modes:	auto, manual

FW features - image control

Image control features:	FW Features - Image Control

FW features - camera control

Trigger modes/sync:	INTERNAL,SOFTWARE,EXTERNAL
Camera control features:	PoCxP, User Sets, PWM(4), Sequencer,

Quantum Efficiency

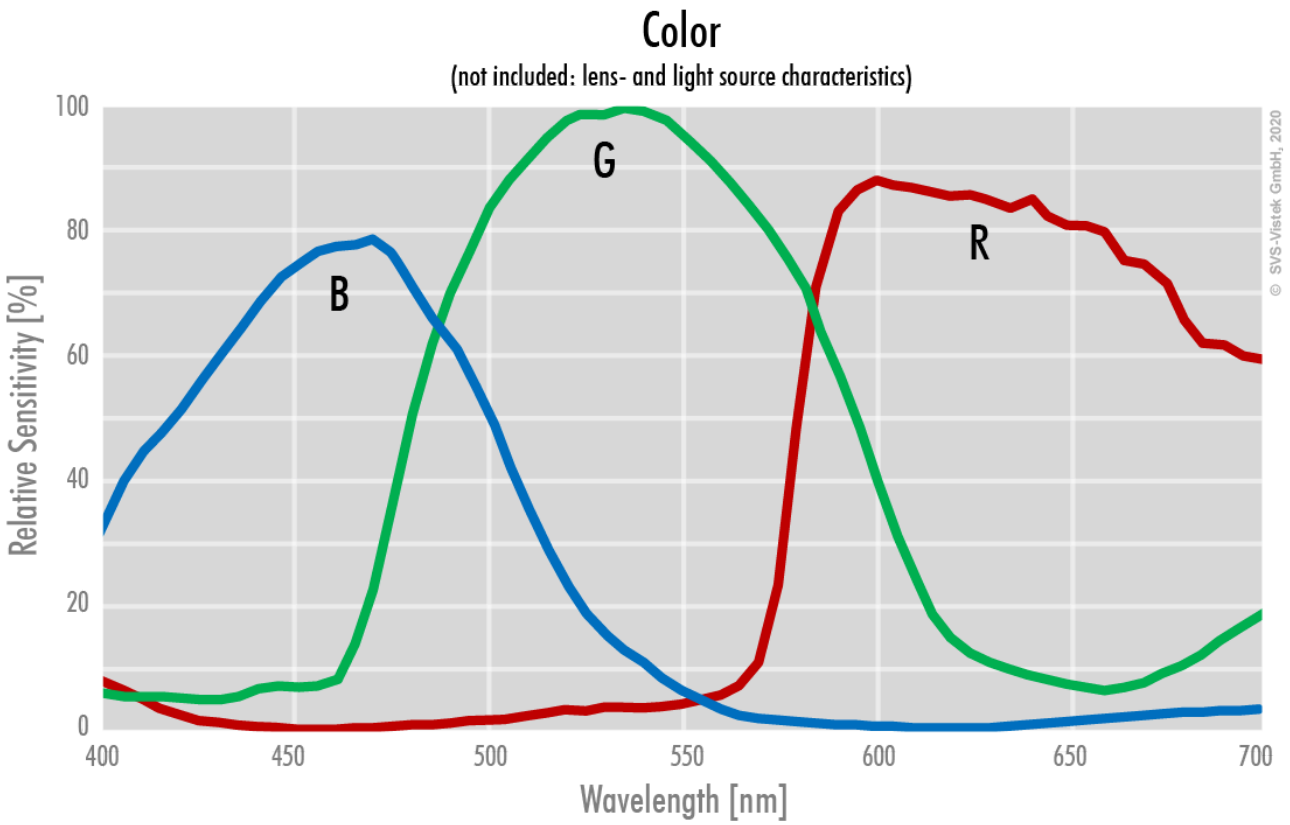

Technical Drawing

front

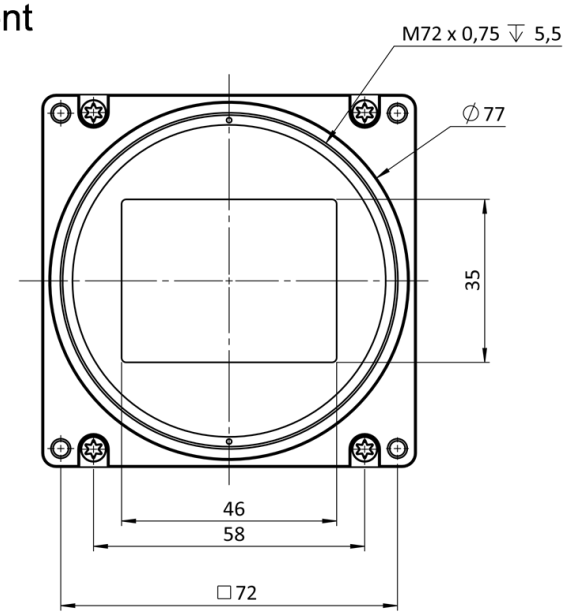

back

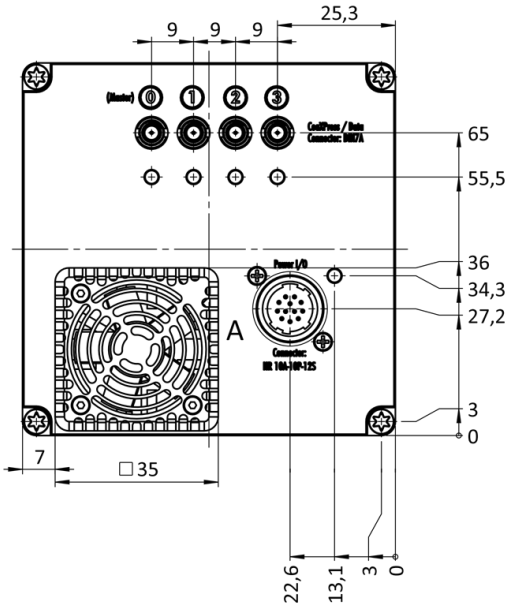

cross section

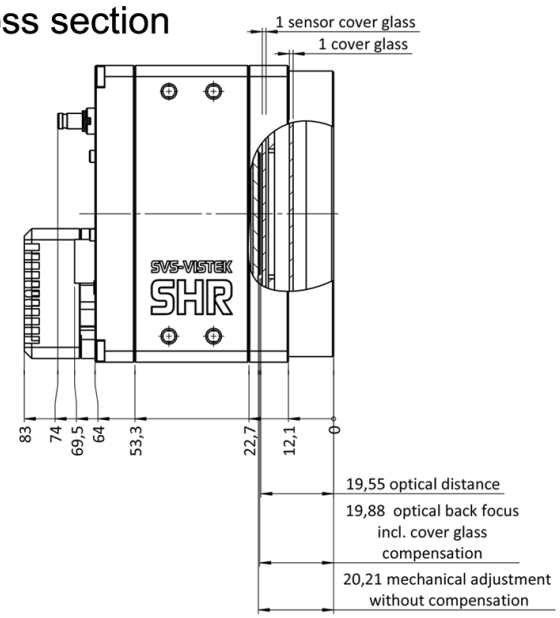

right side

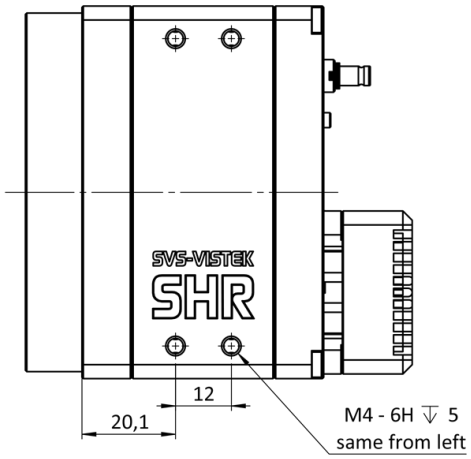

top

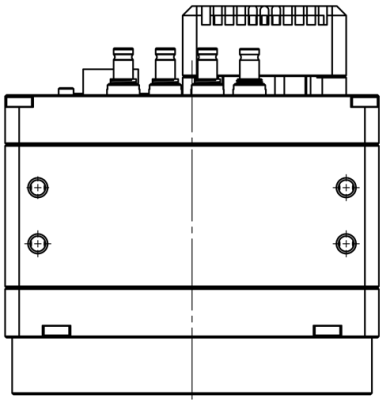

bottom

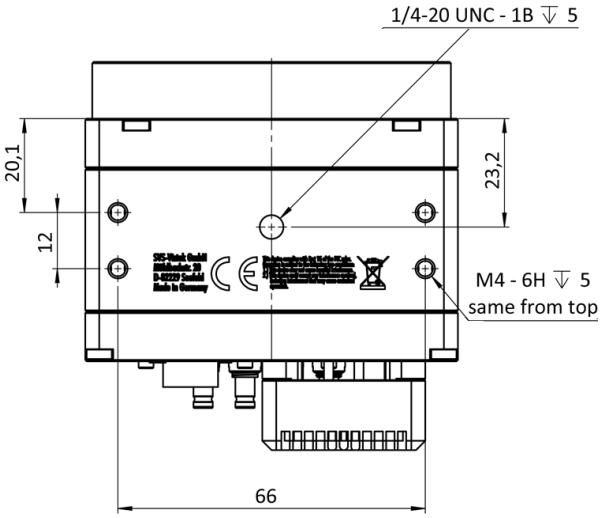

3D

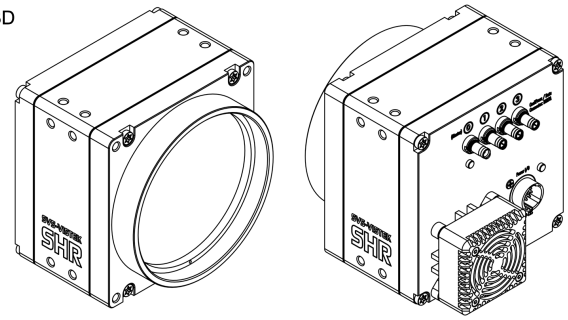

I/O pin assignment

Hirose 12 Pin

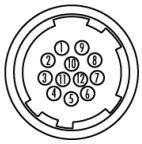

1	VIN –	(GND)	7	OUT 1	(open drain)
2	VIN +	(10 V to 25 V DC)	8	OUT 2	(open drain)
3	IN 4	(RXD RS232)	9	IN 3 +	(opto In +)
4	OUT 4	(TXD RS232)	10	IN 3 –	(opto In –)
5	IN 1	(0 - 24V)	11	OUT 3	(open drain)
6	IN 2	(0 - 24V)	12	OUT 0	(open drain)