EXO USB3

exo342MU3



□□	
□□	exo342MU3
□□□□	F001966
□□□□	EXO USB3
□□	Available

□□□	
□□□□□	Area scan
□□	Mono
□□	Visible
□□□□	400 nm to 1000 nm
□□□	6,464 × 4,852 (31.40 MP)
□□□□□	Sony IMX342
□□□□□ (□□)	cmos
□□□□	Global shutter (GS)
□□□□□	22.3 × 16.74 mm (27.88 mm, Type APS-C)
□□□□	3.45 µm × 3.45 µm

□□□□	
□□□□□	8-bit, 12-bit
□□□□□□	mono8, mono12packed

□□□□	
□□□□	70.5 dB
□□□	39.9 dB

Allied Vision

□□□□□

□□□□□	12 fps
□□□□	47 µs to 60 s
□□	0.0 dB to 48.0 dB

I/O □□□

□□□□	0 x LVDS input, 0 x LVDS output, 0 x TTL input, 0 x TTL output, 2 x 24V input, 4 x Open drain output,
□□□□□□	1 x RS232 input, 1 x RS232 output, 0 x RS422 input, 0 x RS422 output,
□□□□	1 x Optical isolated input, 0 x Optical isolated input,
I/O □□□	12-pin Hirose HR10A-10P-12S
□□□□	10 to 25VDC
□□	External: 6 W (typical)

□□□□

□□□□ (□□)	-10 °C to 65 °C

□□□□

□□□□ (□ x □ x □ mm)	46 × 58 × 58
□□□/□□□□	K9 - AR coating
□□□□	IP40
□□□□	M42
□□	320 g

□□□□□□ FPGA

□□□□□ (RAM)	192 MByte
□□□□□□□ (Flash)	32 MByte

□□

□□□□	usb3.0
□□□□□	(Micro-B)
□□□□	USB3 Vision

FW □□ – □□□□

□□□□	manual, auto, external

FW □□ – □□□□

□□□□	auto, manual
□□□□□□	roi, lut, mirror-image, dpc, shading-correction

FW □□ – □□□□

□□□□/□□	internal, software, external
□□□□□□	User Sets, PWM(4), Sequencer,

□□□□

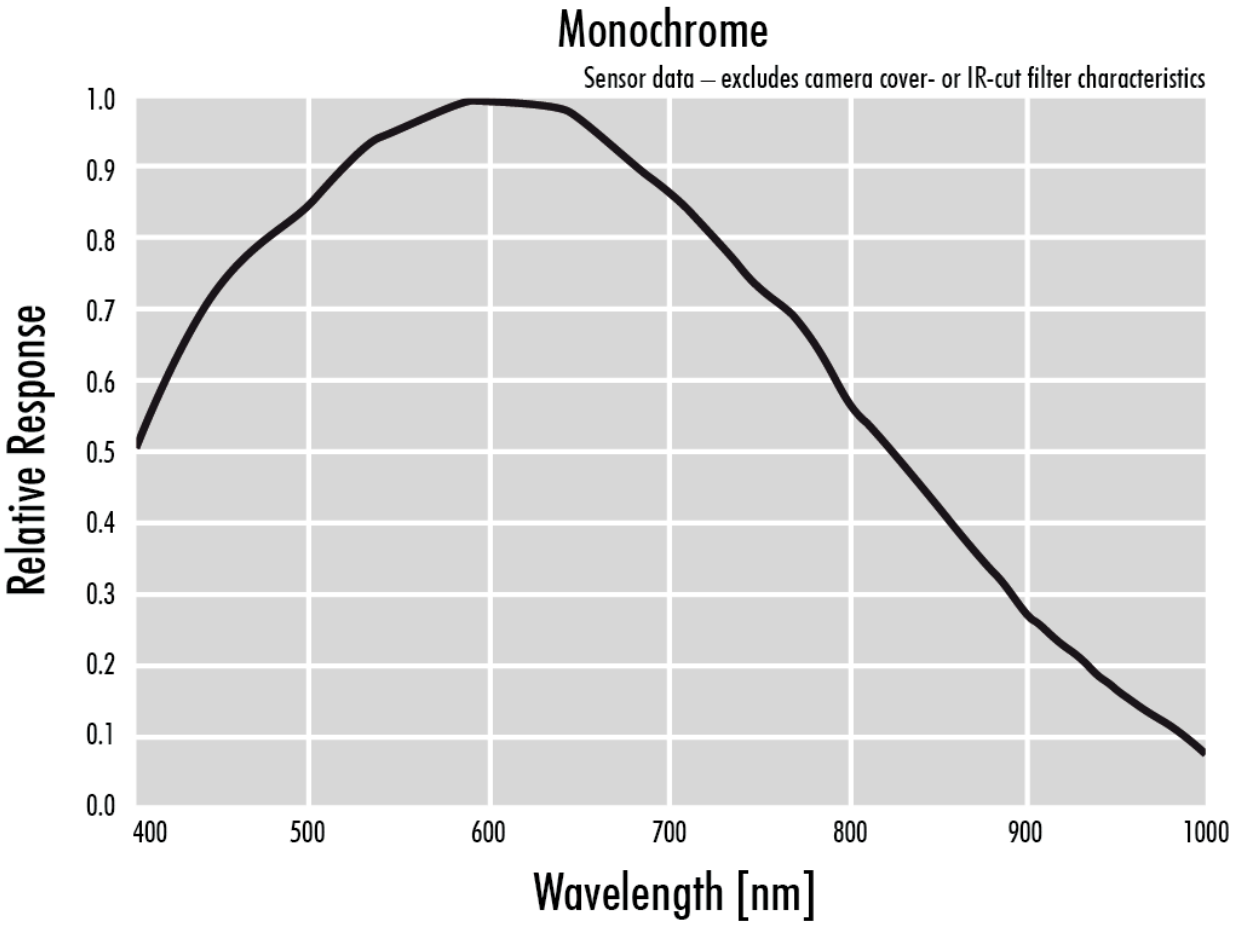
Monochrome
Sensor data – excludes camera cover- or IR-cut filter characteristics
Relative Response
1.0
0.9
0.8
0.7
0.6
0.5
0.4
0.3
0.2
0.1
0.0
400
500
600
700
800
900
1000
Wavelength [nm]

□□□□

front

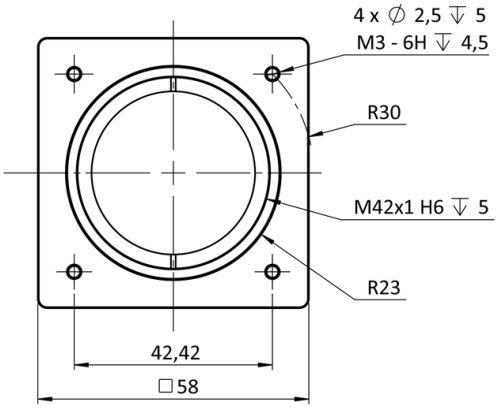

back

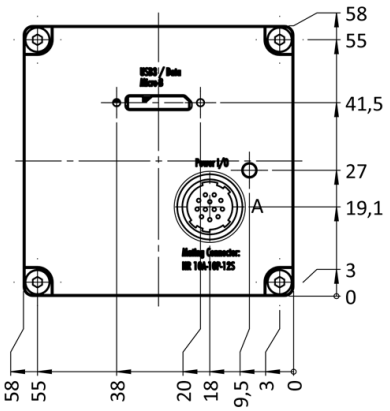

cross section

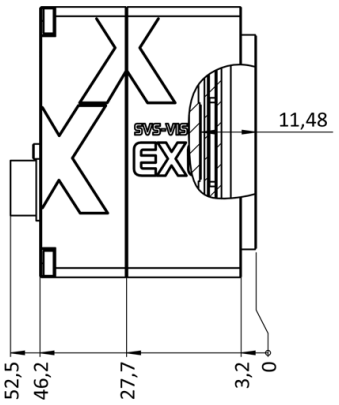

right side



top

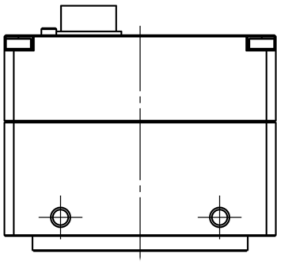

bottom

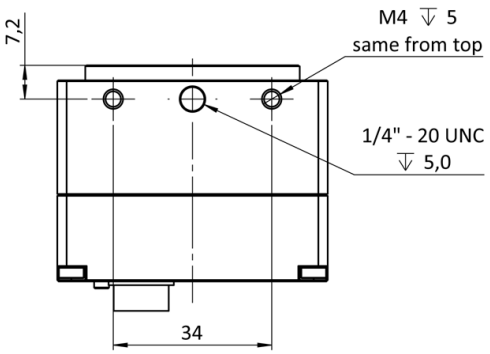

3D

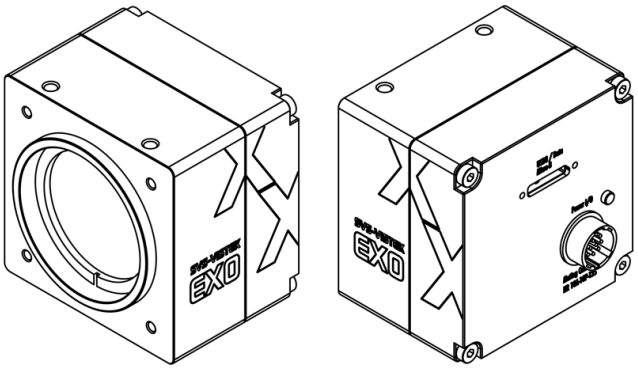

I/O □□□□

Hirose 12 Pin

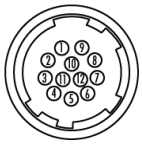

1	VIN –	(GND)	7	OUT 1	(open drain)
2	VIN +	(10 V to 25 V DC)	8	OUT 2	(open drain)
3	IN 4	(RXD RS232)	9	IN 3 +	(opto In +)
4	OUT 4	(TXD RS232)	10	IN 3 –	(opto In –)
5	IN 1	(0 - 24V)	11	OUT 3	(open drain)
6	IN 2	(0 - 24V)	12	OUT 0	(open drain)