Allied Vision



HR CoaXPress

hr342CCX

□□	
□□	hr342CCX
□□□□	F004073
□□□□	HR CoaXPress
□□	Available

□□□	
□□□□□	Area scan
□□	Color
□□	Visible
□□□□	400 nm to 1000 nm
□□□	6,464 × 4,852 (31.40 MP)
□□□□□	Sony IMX342
□□□□□□□□□	cmos
□□□□	Global shutter (GS)
□□□□□	22.3 × 16.74 mm (27.88 mm, Type APS-C)
□□□□	3.45 µm × 3.45 µm

□□□□	
□□□□□□	8-bit, 12-bit
RGB□□□□	bayer8, bayer12

□□□□	
□□□□	70.5 dB
□□□	39.9 dB

□□□□□

□□□□	35.7 fps
□□□□	19 µs to 60 s
□□	0.0 dB to 48.0 dB

I/O□□□

□□□□□IO	0 x LVDS input, 0 x LVDS output, 0 x TTL input, 0 x TTL output, 2 x 24V input, 4 x Open drain output,
□□□□□□□IO	1 x RS232 input, 1 x RS232 output, 0 x RS422 input, 0 x RS422 output,
□□□□□□	1 x Optical isolated input, 0 x Optical isolated input,
I/O□□	12-pin Hirose HR10A-10P-12S
□□□□	10 to 25VDC, Power over CoaXPress
□□	External: 12 W (typical)

□□□□

□□□□□□□	-10 °C to 65 °C

□□□□

□□□□L x W x H mm□	78 × 70 × 70
□□□/□□□□	N-BK7 - AR coating
IP□□□□	IP30
□□□□	M58x0.75
□□	400 g

□□□□FPGA

□□□□□□□□□□□	160 MByte

□□

□□□□	cxp-6 with 4 connections
□□□□□	(Din1.0/2.3)
□□□□	CoaXPress 1.0

□□□□ - □□□□

□□□□	manual, auto
□□□□	auto, manual

□□□□ - □□□□

□□□□□	auto, manual
□□□□□□	roi, lut, mirror-image, dpc, shading-correction, ffc

□□□□ - □□□□

□□□□/□□	internal, software, external
□□□□□□	PoCxP, User Sets, PWM(4), Sequencer,

Quantum Efficiency

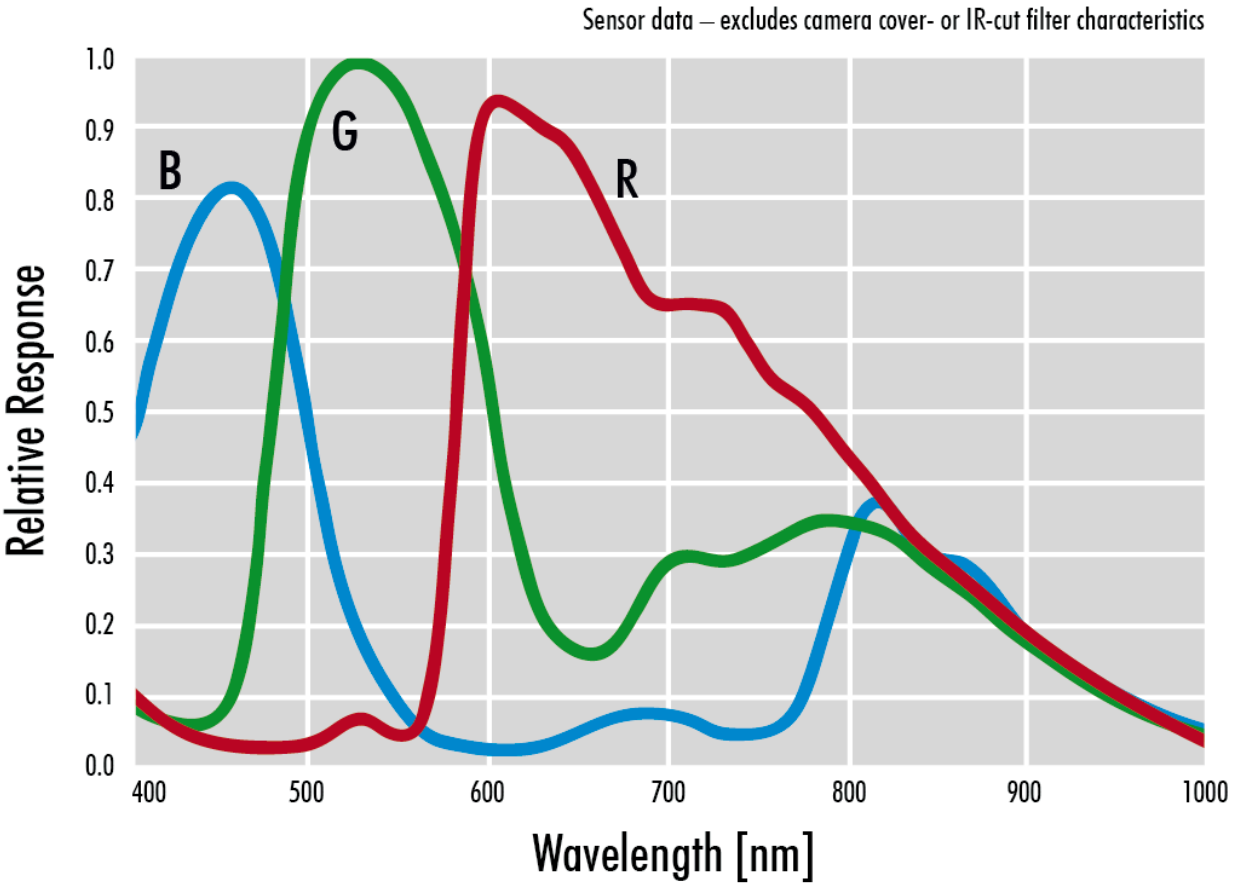

Allied Vision

Technical Drawing

front view

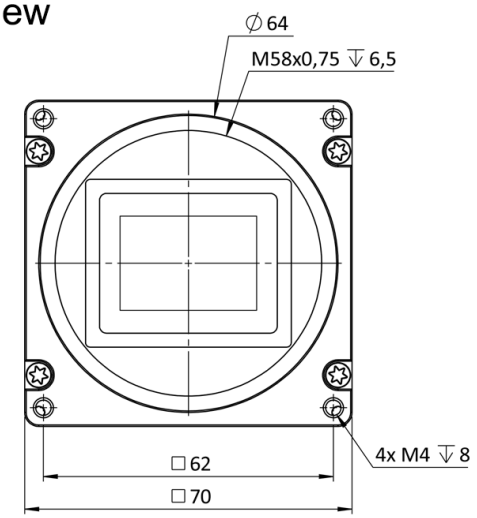

back view

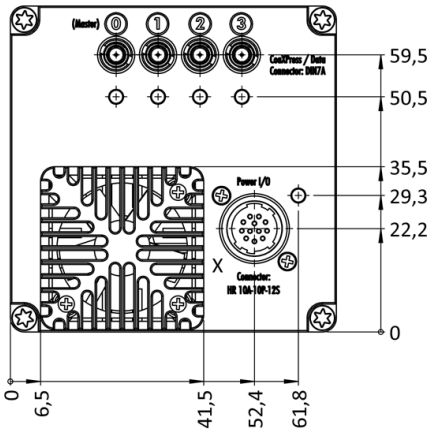

cross section

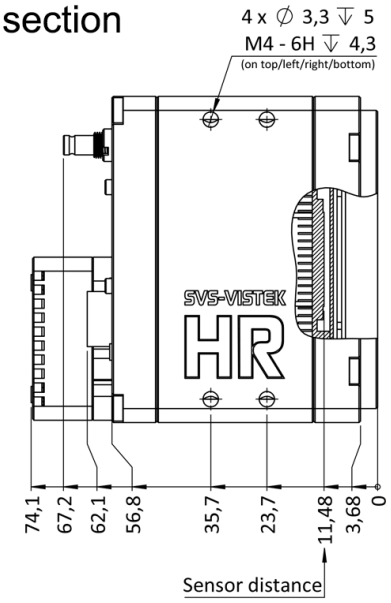

right view

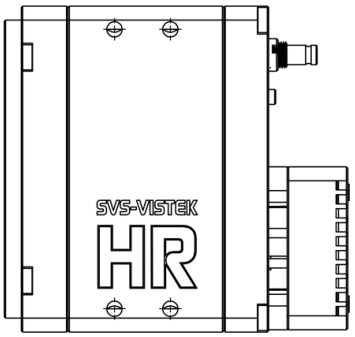

top view

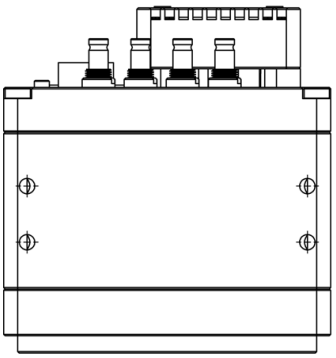

bottom view

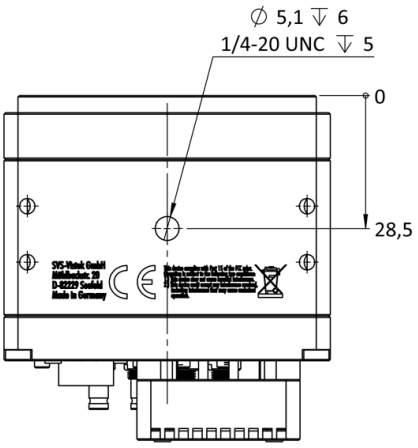

3D view

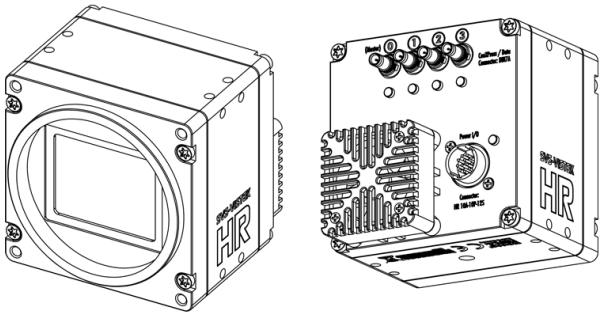

I/O pin assignment

Hirose 12 Pin

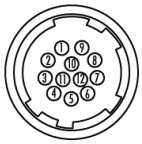

1	VIN –	(GND)	7	OUT 1	(open drain)
2	VIN +	(10 V to 25 V DC)	8	OUT 2	(open drain)
3	IN 4	(RXD RS232)	9	IN 3 +	(opto In +)
4	OUT 4	(TXD RS232)	10	IN 3 –	(opto In –)
5	IN 1	(0 - 24V)	11	OUT 3	(open drain)
6	IN 2	(0 - 24V)	12	OUT 0	(open drain)