Allied Vision

EXO Tracer

exo304CGETR

规	
型号	exo304CGETR
产品代码	F002206
产品系列	EXO Tracer
状态	Available

传感器	
传感器类型	Area scan
色度	Color
光谱	Visible
光谱范围	400 nm to 1000 nm
分辨率	4,096 × 3,000 (12.30 MP)
传感器型号	Sony IMX304
传感器架构（材料）	cmos
快门类型	Global shutter (GS)
传感器尺寸	14.13 × 10.35 mm (17.52 mm, Type 1.1)
像素尺寸	3.45 µm × 3.45 µm

像素格式	
传感器位深度	8-bit, 12-bit
RGB像素格式	bayer8, bayer12packed

成像性能	
动态范围	72 dB
信噪比	39.5 dB

时序与增益	
最大帧率	10 fps
最大帧率（突发）	23.6 fps
曝光时间	28 µs to 60 s
增益	0.0 dB to 48.0 dB

I/O□□□

□□□□□IO	0 x LVDS input, 0 x LVDS output, 0 x TTL input, 0 x TTL output, 2 x 24V input, 4 x Open drain output,
□□□□□□□IO	1 x RS232 input, 1 x RS232 output, 0 x RS422 input, 0 x RS422 output,
□□□□□□	1 x Optical isolated input, 0 x Optical isolated input,
I/O□□	12-pin Hirose HR10A-10P-12S
□□□□	10 to 25VDC, Power over Ethernet
□□	External: 7 W (typical)

□□□□

□□□□□□□	-10 °C to 60 °C

□□□□

□□□□□L x W x H mm□	45 × 58 × 58
□□□/□□□□	IR-Cut - 680nm
IP□□□□	IP40
□□□□	MFT
□□	320 g

□□□□□FPGA

□□□□□RAM□	192 MByte
□□□□□□□□□□□□	32 MByte

□□

□□□□	gige
□□□□□	(RJ-45)
□□□□	GigE Vision

□□□□ - □□□□

□□□□	manual, auto, external
□□□□	auto, manual
□□□□□	auto, manual
□□□□□□	roi, lut, color-transformation, mirror-image, dpc, shading-correction

□□□□ - □□□□

□□□□/□□	internal, software, external
□□□□□□□	PTP, BurstMode, User Sets, POE, PWM(4), Sequencer,

Quantum Efficiency

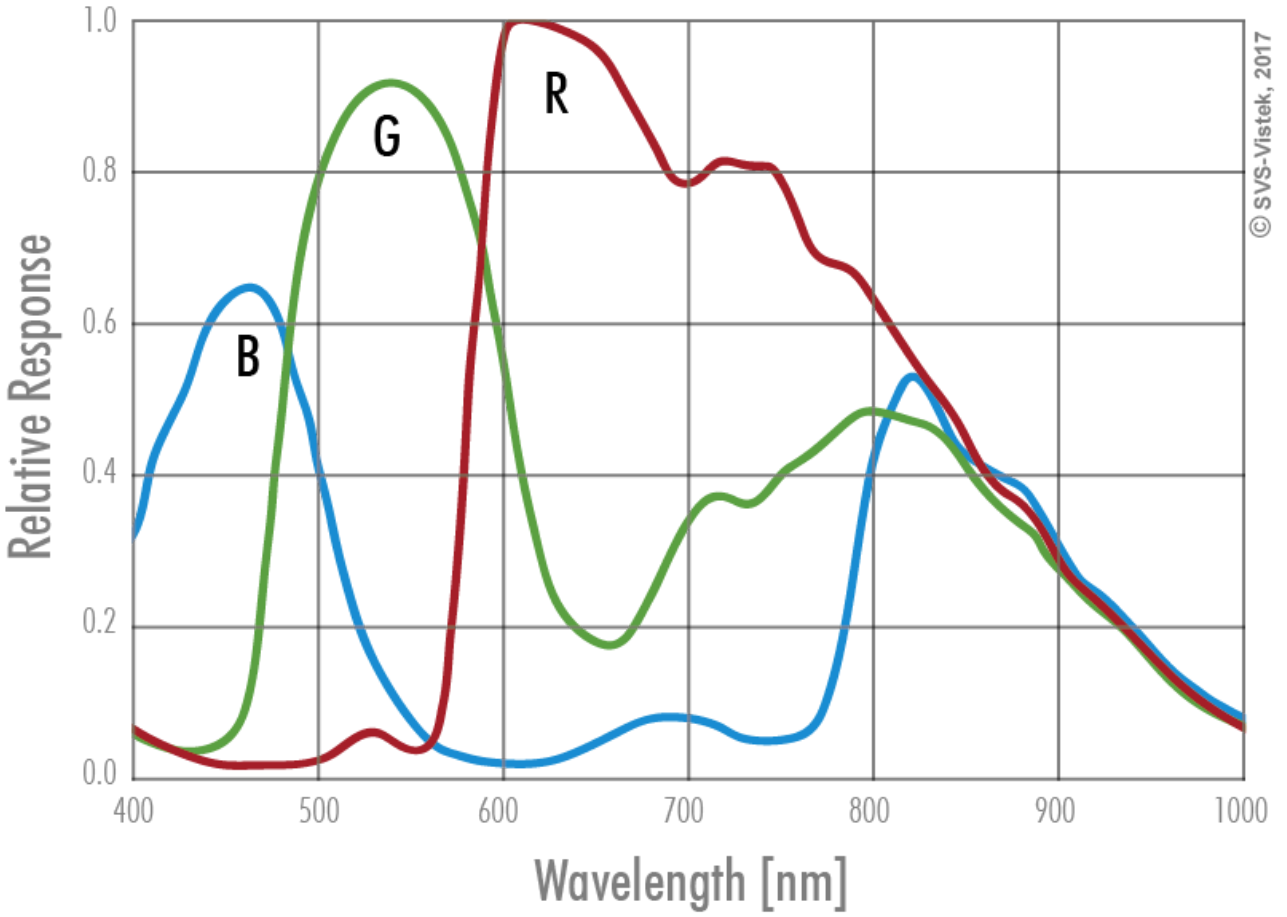

Allied Vision

Technical Drawing

front

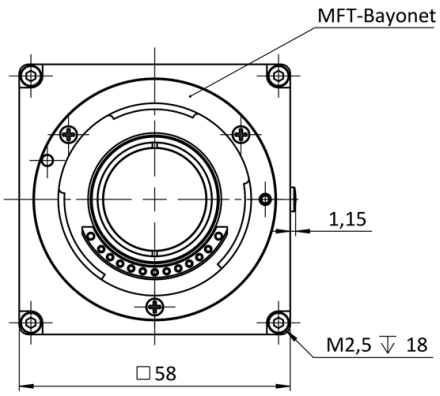

back

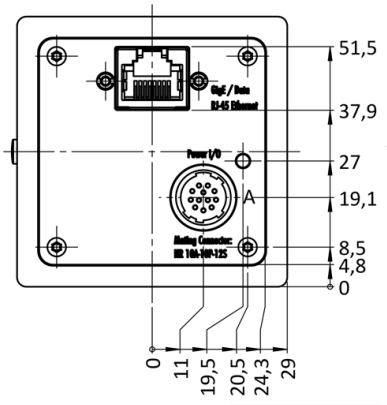

cross section

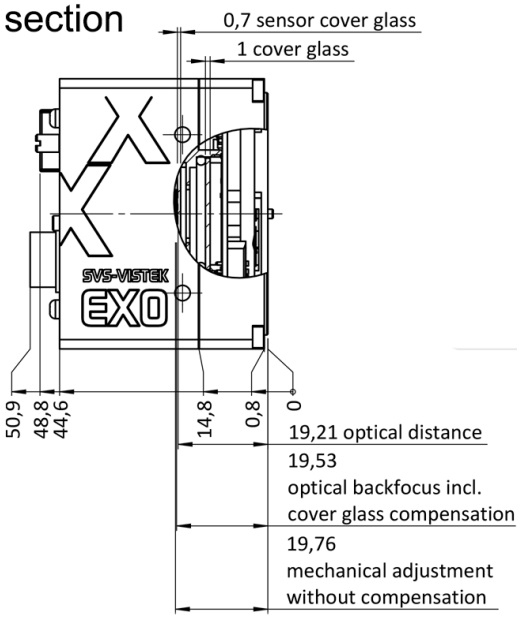

right side

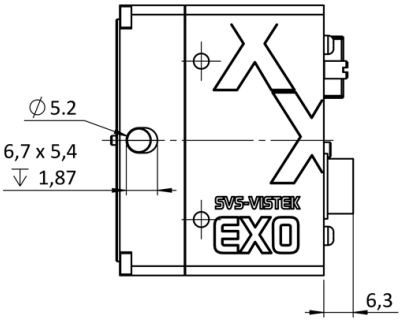

top

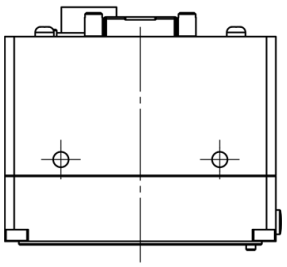

bottom

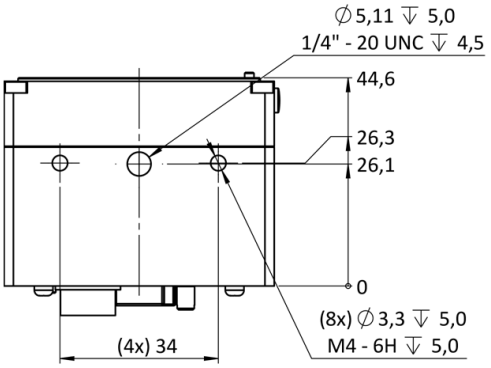

3D

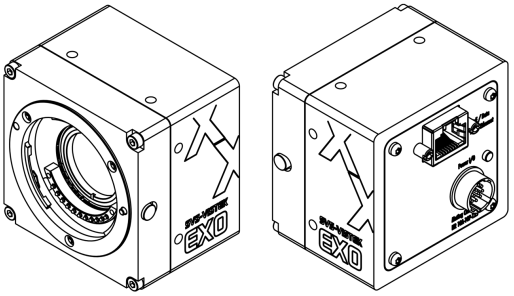

I/O pin assignment

Hirose 12 Pin

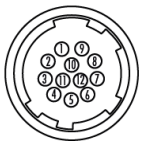

1	VIN –	(GND)	7	OUT 1	(open drain)
2	VIN +	(10 V to 25 V DC)	8	OUT 2	(open drain)
3	IN 4	(RXD RS232)	9	IN 3 +	(opto In +)
4	OUT 4	(TXD RS232)	10	IN 3 –	(opto In –)
5	IN 1	(0 - 24V)	11	OUT 3	(open drain)
6	IN 2	(0 - 24V)	12	OUT 0	(open drain)