EXO GigE

exo264MGE



□□	
□□	exo264MGE
□□□□	F002184
□□□□	EXO GigE
□□	Available

□□□	
□□□□□	Area scan
□□	Mono
□□	Visible
□□□□	400 nm to 1000 nm
□□□	2,448 × 2,048 (5.00 MP)
□□□□□	Sony IMX264
□□□□□□□□□	cmos
□□□□	Global shutter (GS)
□□□□□	8.45 × 7.07 mm (11.01 mm, Type 2/3)
□□□□	3.45 µm × 3.45 µm

□□□□	
□□□□□□	8-bit, 12-bit
□□□□□□	mono8, mono12packed

□□□□	
□□□□	71.5 dB
□□□	39.5 dB

□□□□□

□□□□	24.5 fps
□□□□□□□□□	36 fps
□□□□	28 µs to 60 s
□□	0.0 dB to 48.0 dB

I/O□□□

□□□□□IO	0 x LVDS input, 0 x LVDS output, 0 x TTL input, 0 x TTL output, 2 x 24V input, 4 x Open drain output,
□□□□□□□IO	1 x RS232 input, 1 x RS232 output, 0 x RS422 input, 0 x RS422 output,
□□□□□□	1 x Optical isolated input, 0 x Optical isolated input,
I/O□□	12-pin Hirose HR10A-10P-12S
□□□□	10 to 25VDC, Power over Ethernet
□□	External: 4.5 W (typical)

□□□□

□□□□	-10 °C to 60 °C (□□)

□□□□

□□□□□L x W x H mm□	43 × 50 × 50
□□□/□□□□	K9 - AR coating - 400-850nm
IP□□□□	IP40
□□□□	C-Mount
□□	138 g

□□□□□FPGA

□□□□□RAM□	192 MByte
□□□□□□□□□□□□	32 MByte

□□

□□□□	gige
□□□□□	(RJ-45)
□□□□	GigE Vision

□□□□ - □□□□

□□□□	manual, auto, external
□□□□	auto, manual
□□□□□□	roi, lut, mirror-image, dpc, shading-correction, ffc

□□□□ - □□□□

□□□□/□□	internal, software, external
□□□□□□	PTP, BurstMode, User Sets, POE, PWM(4), Sequencer,

Quantum Efficiency

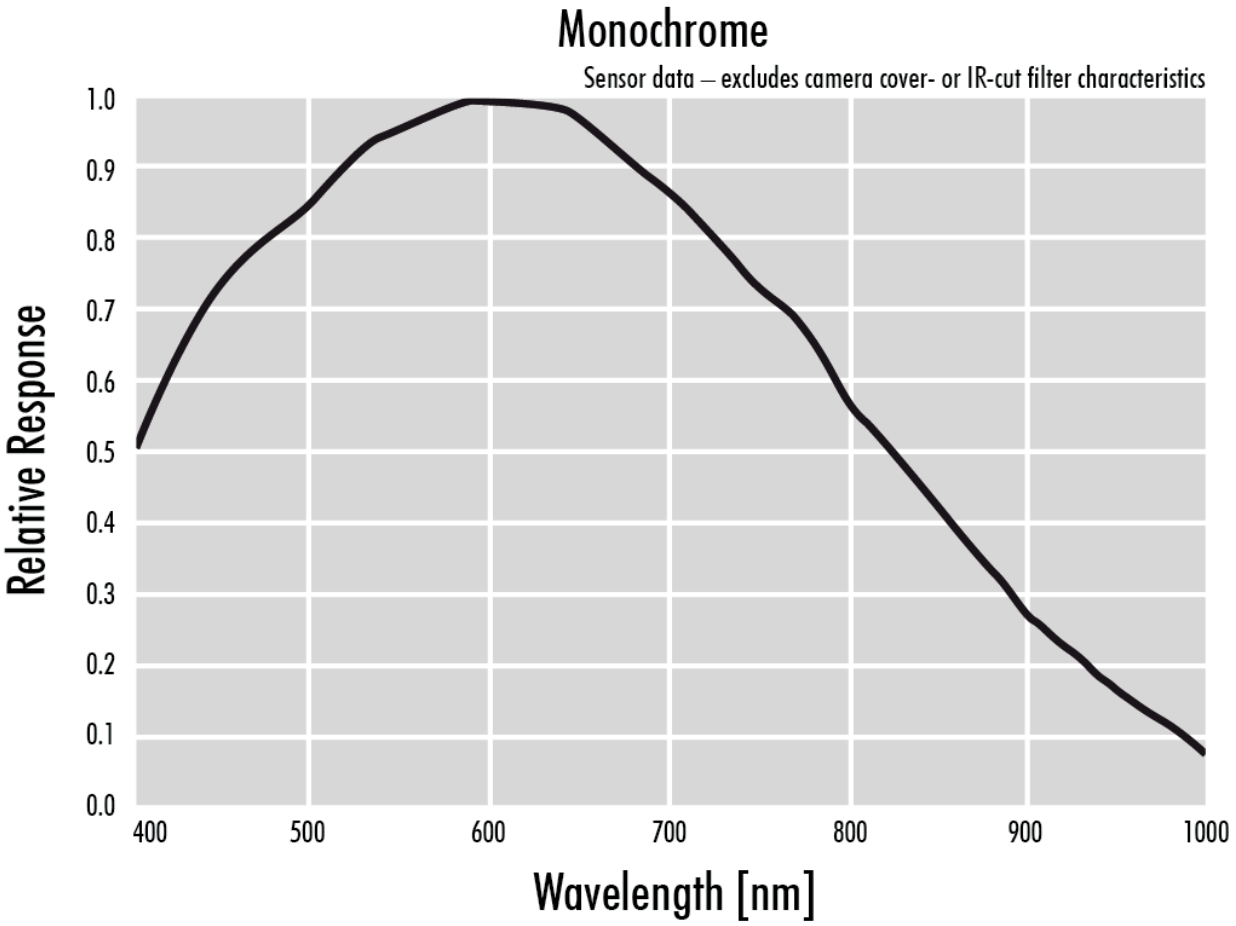

Allied Vision

Technical Drawing

front

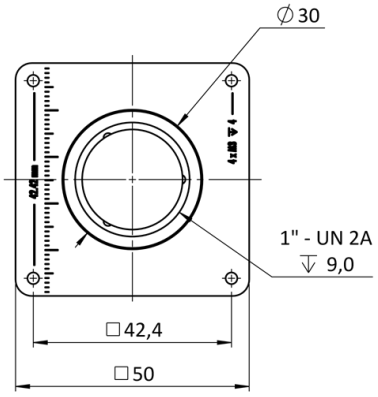

back

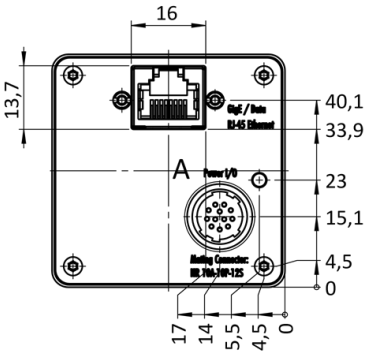

cross section

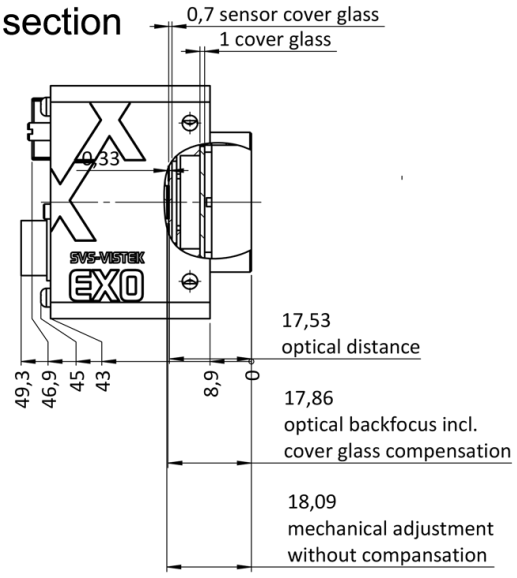

right side

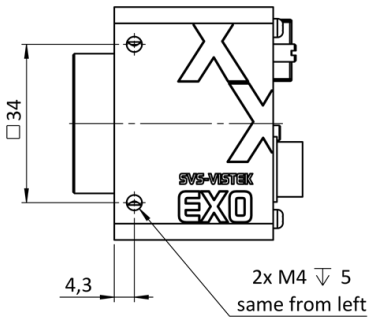

top

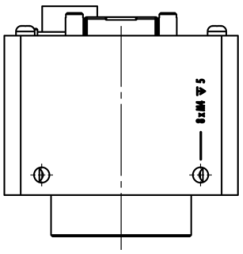

bottom

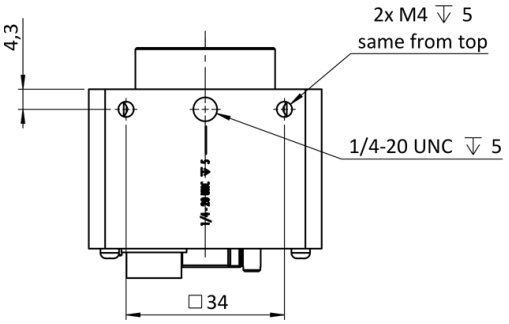

3D

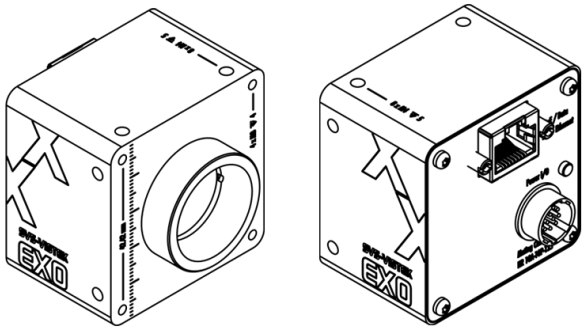

I/O pin assignment

Hirose 12 Pin

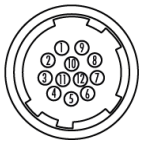

1	VIN –	(GND)	7	OUT 1	(open drain)
2	VIN +	(10 V to 25 V DC)	8	OUT 2	(open drain)
3	IN 4	(RXD RS232)	9	IN 3 +	(opto In +)
4	OUT 4	(TXD RS232)	10	IN 3 –	(opto In –)
5	IN 1	(0 - 24V)	11	OUT 3	(open drain)
6	IN 2	(0 - 24V)	12	OUT 0	(open drain)