Alvium 1800 U

Alvium 1800 U-530 VSWIR



Alvium 1800 U-530 VSWIR innovative USB camera with Sony IMX992 SenSWIR InGaAs global shutter sensor provides industrial performance for cost effective embedded and machine vision applications.

□□	
□□	Alvium 1800 U-530 VSWIR
□□□□	Alvium 1800 U
□□	Available

□□□	
□□□□□	Area scan
□□	Mono
□□	SWIR, Visible SWIR
□□□□	400 nm to 1700 nm
□□□	2,592 × 2,056 (5.30 MP)
□□□□□	Sony IMX992 | InGaAs
□□□□□ (□□)	InGaAs
□□□□	Global shutter (GS)
□□□□□	8.9 × 7.1 mm (11.4 mm, Type 1/1.4)
□□□□	3.45 µm × 3.45 µm

□□□□	
□□□□□	10-bit, 12-bit, 8-bit
□□□□□□	Mono8 (default)

□□□□□	
□□□□□	77 fps
□□□□	38 µs to 10 s
□□	0.0 dB to 42.0 dB

I/O □□□

□□□□	4 programmable GPIOs
□□□□	Power over USB 3.1 Gen 1 | External power 5.0 V
□□	USB power: 2.9 W (typical) | External power: 2.9 W (typical)

□□□□

□□□□	-20 °C to 55 °C (□□)

□□□□

□□□□ (□ x □ x □ mm)	38 × 29 × 29
□□□□	C-Mount, CS-Mount
□□	65 g

□□□□□□ FPGA

□□□□□ (RAM)	256 KByte
□□□□□□□ (Flash)	1024 KByte

□□

□□□□	usb3.0
□□□□	USB3 Vision

□□□□

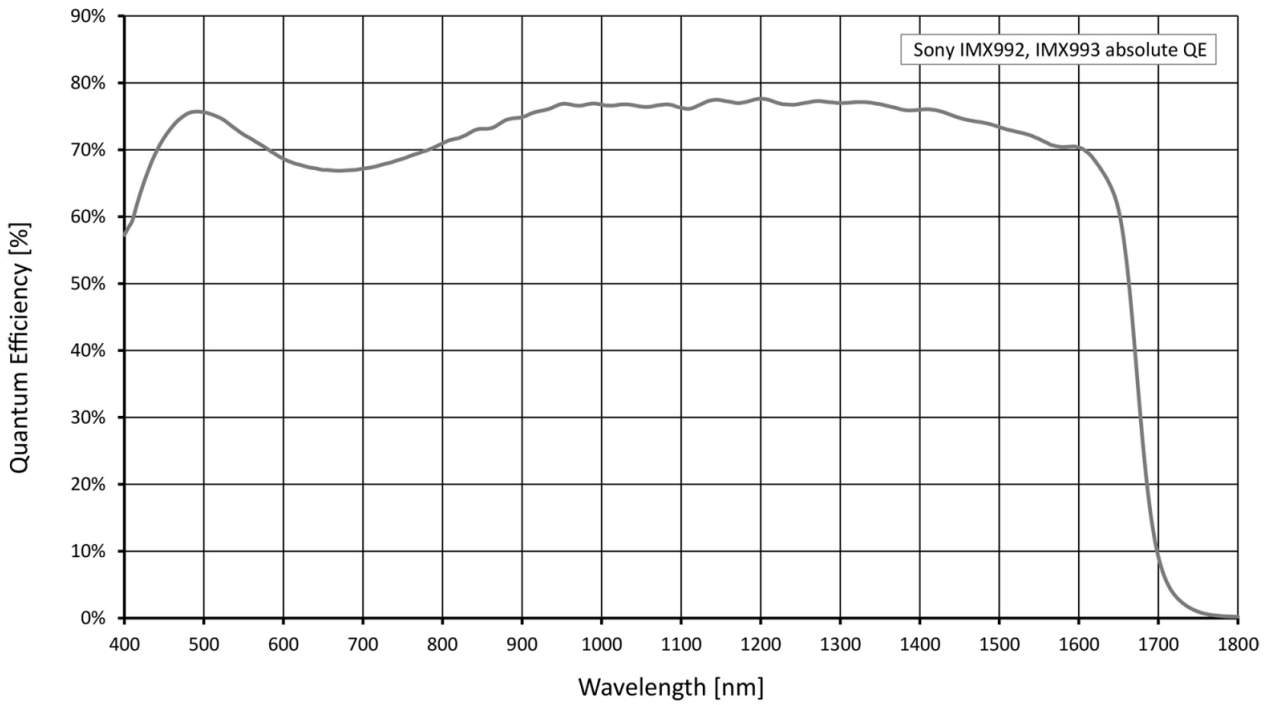
Sony IMX992, IMX993 absolute QE
Quantum Efficiency [%]
90%
80%
70%
60%
50%
40%
30%
20%
10%
0%
400
500
600
700
800
900
1000
1100
1200
1300
1400
1500
1600
1700
1800
Wavelength [nm]

□□□□

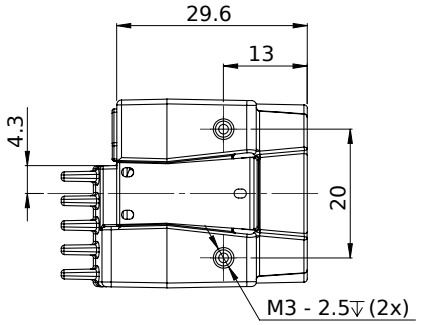
29.6
13
4.3
20
M3 - 2.5↧(2x)

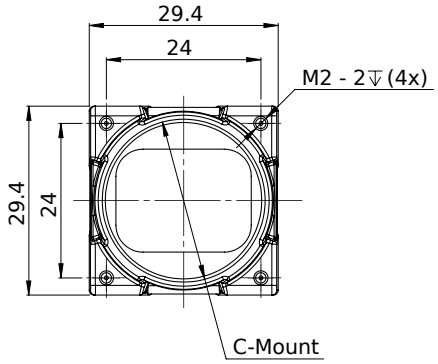
29.4
24
M2 - 2↧(4x)
29.4
24
C-Mount

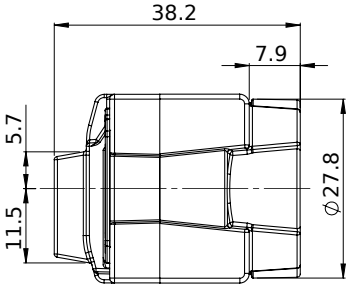
38.2
7.9
5.7
11.5
⌀27.8

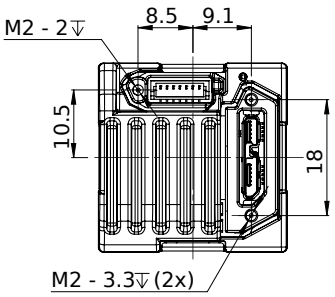
M2 - 2↧
8.5
9.1
10.5
18
M2 - 3.3↧(2x)

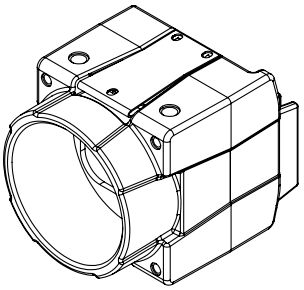

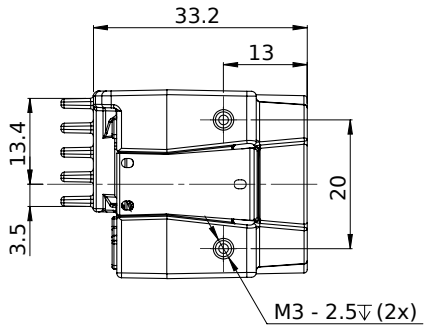
33.2
13
13.4
20
3.5
M3 - 2.5↧(2x)

