Alvium 1800 U

Alvium 1800 U-052



Alvium 1800 U-052 innovative USB camera with Sony IMX426 CMOS global shutter sensor provides industrial performance for cost effective embedded and machine vision applications.

□□	
□□	Alvium 1800 U-052
□□□□	Alvium 1800 U
□□	Available

□□□	
□□□□□	Area scan
□□	Color, Mono
□□	Visible
□□□□	300 nm to 1100 nm
□□□	816 × 624 (0.50 MP)
□□□□□	Sony IMX426
□□□□□ (□□)	cmos
□□□□	Global shutter (GS)
□□□□□	7.3 × 5.6 mm (9.2 mm, Type 1/1.7)
□□□□	9.00 µm × 9.00 µm

□□□□	
□□□□□	10-bit, 12-bit, 8-bit
YUV □□□□	YCbCr411_8_CbYYCrYY, YCbCr422_8_CbYCrY, YCbCr8_CbYCr
RGB □□□□	BGR8, RGB8 (default)
Bayer □□□□	BayerRG12

□□□□	
□□□□ @ 529 nm	73 %

□□□□□

□□□□□	688 fps
□□□□	24 µs to 10 s
□□	0.0 dB to 48.0 dB

I/O □□□

□□□□	4 programmable GPIOs
□□□□	Power over USB 3.1 Gen 1 | External power 5.0 V
□□	USB power: 1.9 W (typical) | Ext. power: 2.1 W (typical)

□□□□

□□□□	-20 °C to 65 °C (□□)

□□□□

□□□□ (□ x □ x □ mm)	38 × 29 × 29
□□□□	C-Mount, CS-Mount
□□	60 g

□□□□□□ FPGA

□□□□□ (RAM)	256 KByte
□□□□□□□ (Flash)	1024 KByte

□□

□□□□	usb3.0
□□□□	USB3 Vision

□□□□

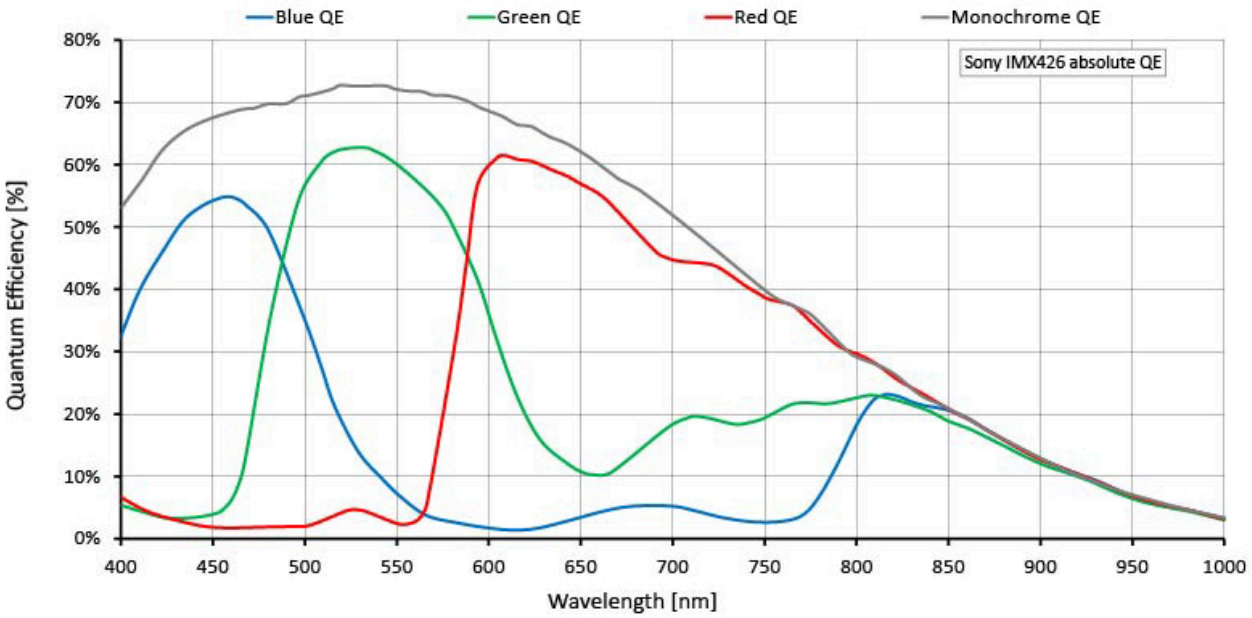
Blue QE
Green QE
Red QE
Monochrome QE
Sony IMX426 absolute QE
Quantum Efficiency [%]
80%
70%
60%
50%
40%
30%
20%
10%
0%
400
450
500
550
600
650
700
750
800
850
900
950
1000
Wavelength [nm]

□□□□

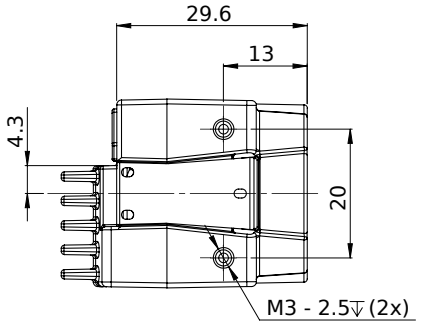
29.6
13
4.3
20
M3 - 2.5↧(2x)

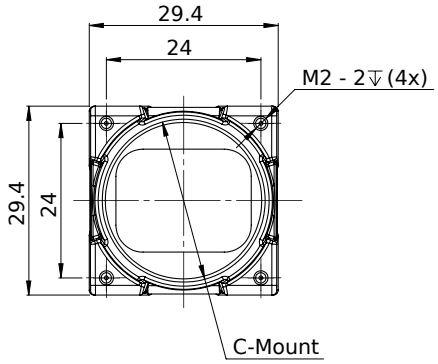
29.4
24
M2 - 2↧(4x)
29.4
24
C-Mount

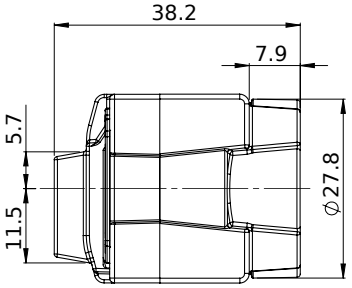
38.2
7.9
5.7
11.5
⌀27.8

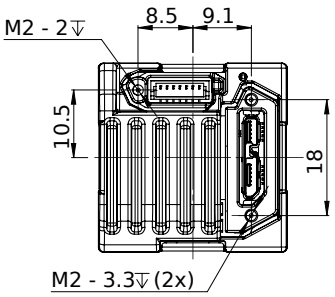
M2 - 2↧
8.5
9.1
10.5
18
M2 - 3.3↧(2x)

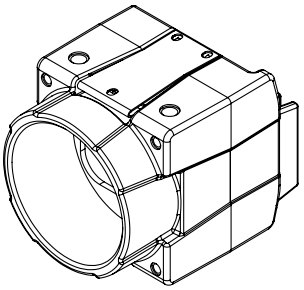

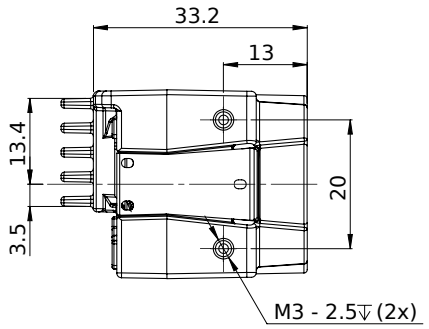
33.2
13
13.4
20
3.5
M3 - 2.5↧(2x)

