Alvium C

Alvium 1800 C-291



Alvium 1800 C-291 innovative MIPI CSI-2 camera with Sony IMX421 CMOS global shutter sensor provides industrial performance for cost effective embedded and machine vision applications.

□□	
□□□	Alvium 1800 C-291
□□□□□□□	Alvium C
□□□□□	Available

□□□□	
□□□□□□□□	Area scan
□□□	Color, Mono
□□□□□	Visible
□□□□□□□□	300 nm to 1100 nm
□□□	1,944 × 1,472 (2.90 MP)
□□□□□□□□	Sony IMX421
□□□□□□□□□□□	cmos
□□□□□□□□□	Global shutter (GS)
□□□□□□□□	8.8 × 6.6 mm (10.8 mm, Type 2/3)
□□□□□□□□	4.50 µm × 4.50 µm

□□□□□□□□□□	
□□□□□□□□□□	10-bit, 12-bit, 8-bit
□□□□□□□□□□□□□□□□	GREY, RAW10, RAW12, RAW8, Y10, Y12
YUV□□□□□□□□□□□	UYVY, YCbCr411_8_CbYYCrYY, YCbCr422_8_CbYCrY, YCbCr8_CbYCr, YUV422 8-bit
RGB□□□□□□□□□□□	BGR8, RGB3, RGB8 (default), RGB888 (default)
□□□□□□□□□□□□□□□□	BayerGR10, BayerGR10p, BayerGR12, BayerGR12p, BayerGR8

□□□□□□□□□

□□□□ @ 529 nm	73 %

□□□□□□□□□□

□□□□□□□□□□	166 fps
□□□□	17 µs to 10 s
□□□	0.0 dB to 48.0 dB

I/O□□□

□□□□	2 programmable GPIOs
□□	5 VDC over MIPI CSI-2
□□□□	Typical: 3.8 W

□□□□

□□□□	-20 °C to 65 °C (□□)

□□□□□

□□□□□L x W x H mm□	26 × 29 × 29
□□□□□□□□	C-Mount, CS-Mount
□□	40 g

□□□□□□□□□FPGA

□□□□□□□RAM□	256 KByte
□□□□□□□□□□□□□□□□	1024 KByte

□□□□□□□□□

□□□□□□□□□□□□□	MIPI CSI-2, up to 4 lanes

Quantum Efficiency

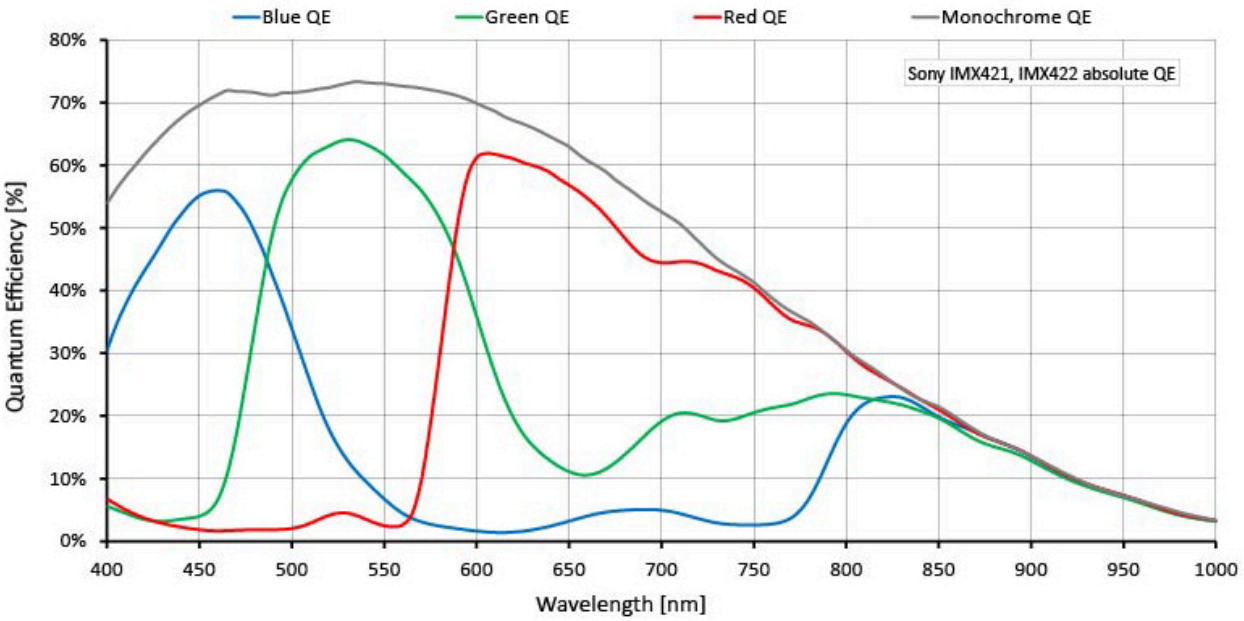

Technical Drawing

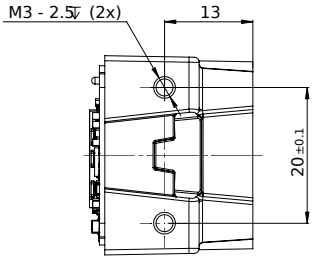

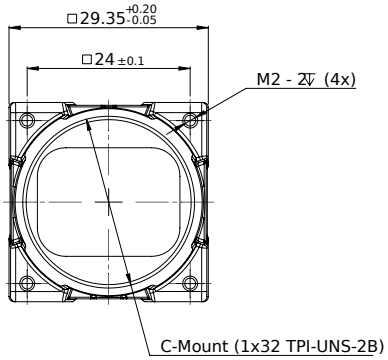

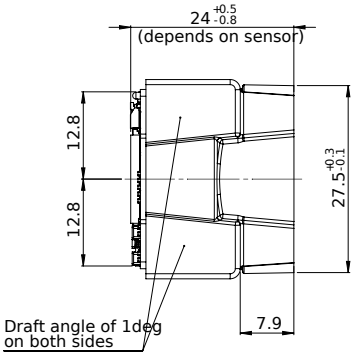

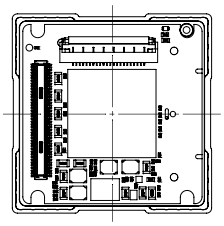

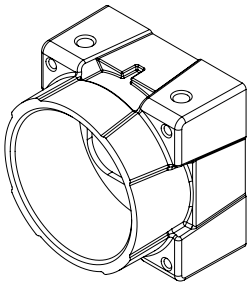

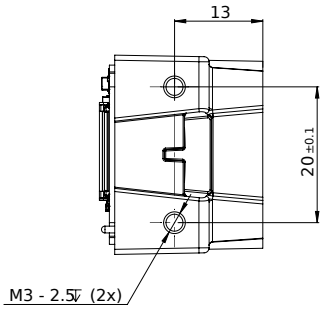

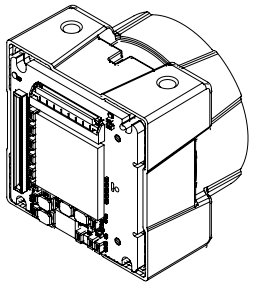

Allied Vision