Allied Vision



HR CoaXPress

hr49MCX12

□□	
□□	hr49MCX12
□□ □□	F004183
□□ □□□	HR CoaXPress
□□	Available

□□	
□□ □□	Area scan
□□□	Mono
□□□□	Visible
□□□□ □□	400 nm to 1000 nm
□□□	7,008 × 7,000 (49.00 MP)
□□ □□	Gpixel GMAX3265-49
□□ □□□□ (□□)	cmos
□□ □□	Global shutter (GS)
□□ □□	22.43 × 22.4 mm (31.7 mm, Type 2.3)
□□ □□	3.20 µm × 3.20 µm

□□ □□	
□□ □□ □□	8-bit, 10-bit
□□□□ □□ □□	mono8, mono10

□□□ □ □□	
□□ □□□ □□	71 fps
□□ □□	12 µs to 60 s
□□	0.0 dB to 18.0 dB

I/O 및 □□

□□□ □□	0 x LVDS input, 0 x LVDS output, 0 x TTL input, 0 x TTL output, 2 x 24V input, 4 x Open drain output,
□□ □□□ □□	1 x RS232 input, 1 x RS232 output, 0 x RS422 input, 0 x RS422 output,
□□□ □□	1 x Optical isolated input, 0 x Optical isolated input,
I/O □□□	12-pin Hirose HR10A-10P-12S
□□ □□ □□	10 to 25VDC
□□ □□	External: 18 W (typical)

□□ □□

□□ □□	-10 °C to 60 °C (□□□)

□□□ □□

□□ □□ (L x W x H mm)	76 × 70 × 70
□□/□□ □□	N-BK7 - AR coating
IP □□	IP30
□□ □□□	M58x0.75
□□	420 g

□□□ □□□ 및 FPGA

□□□□ □□□ (□□□)	32 MByte

□□□□

□□□ □□□□□	cxp-12 with 4 connections
□□□□□ □□□	(micro-BNC)
□□ □□	CoaXPress 2.0

FW □□ - □□□ □□

□□ □□	manual, auto, external
□□ □□	auto, manual
□□□ □□ □□	roi, lut, mirror-image, dpc, shading-correction, ffc

FW □□ - □□□ □□

□□□ □□/□□□	internal, software, external
□□□ □□ □□	User Sets, PWM(4), Sequencer,

Quantum Efficiency

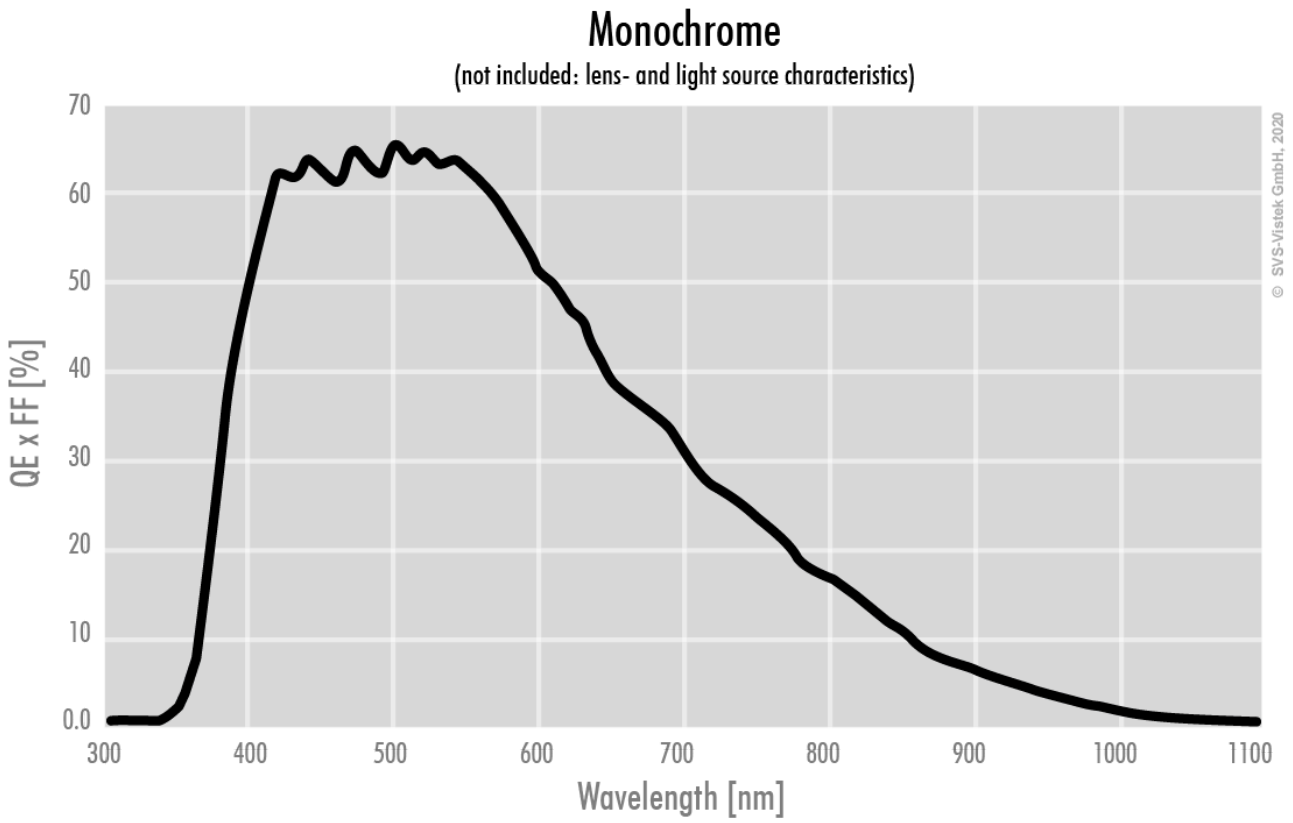

Allied Vision

Technical Drawing

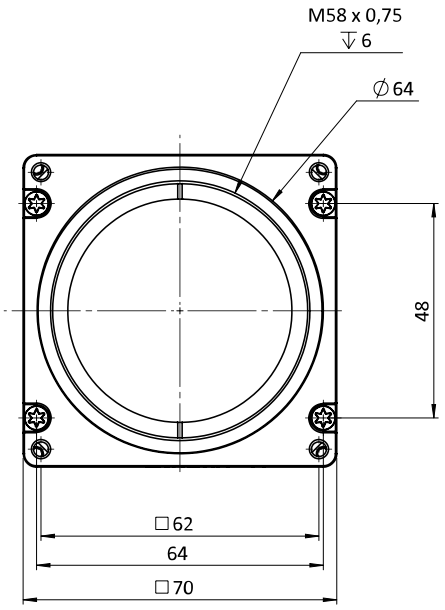

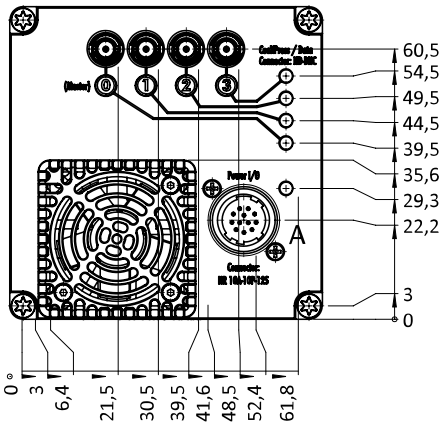

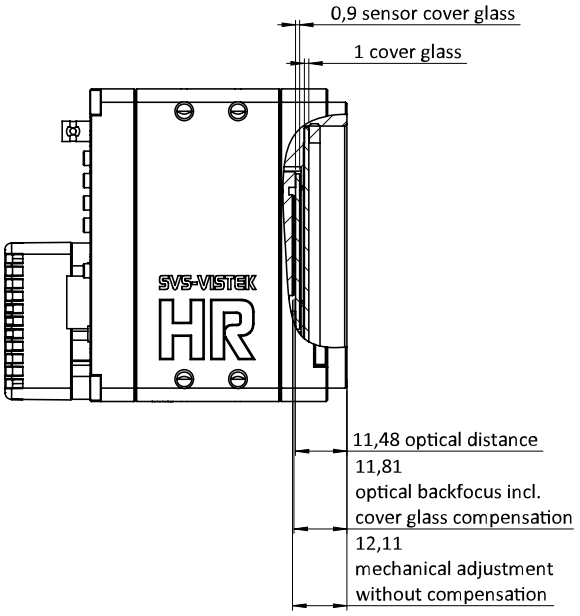

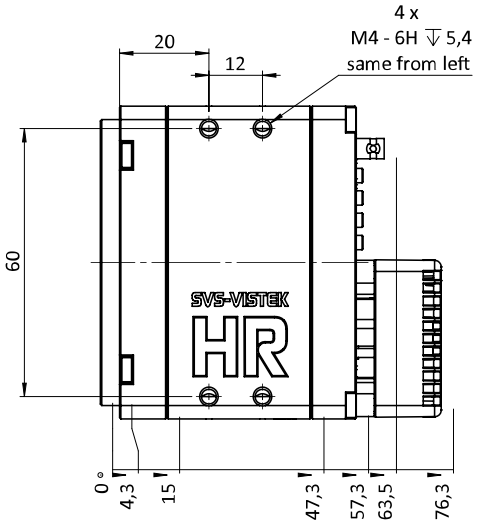

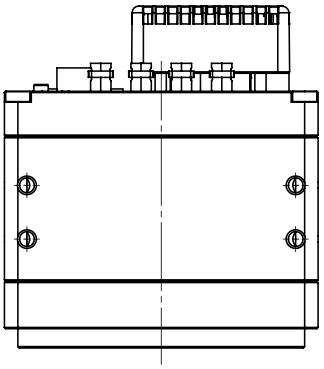

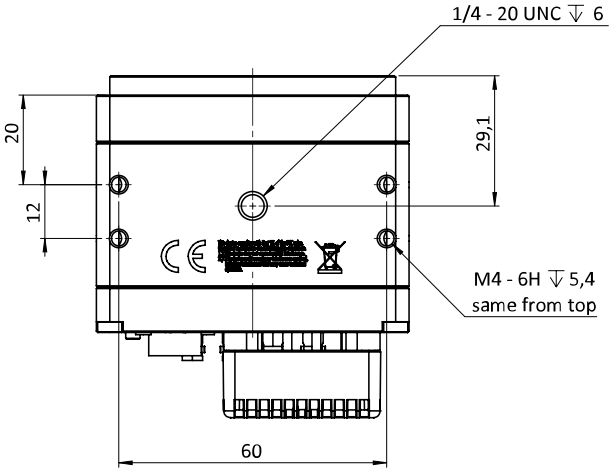

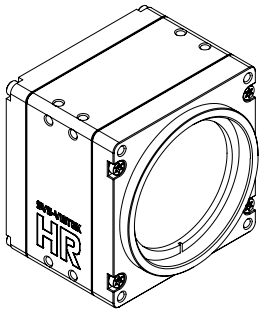

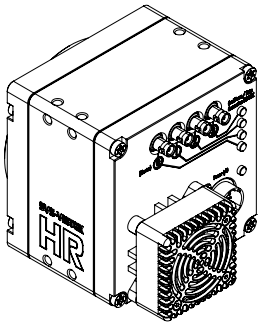

I/O pin assignment

Hirose 12 Pin

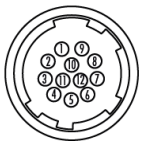

1	VIN –	(GND)	7	OUT 1	(open drain)
2	VIN +	(10 V to 25 V DC)	8	OUT 2	(open drain)
3	IN 4	(RXD RS232)	9	IN 3 +	(opto In +)
4	OUT 4	(TXD RS232)	10	IN 3 –	(opto In –)
5	IN 1	(0 - 24V)	11	OUT 3	(open drain)
6	IN 2	(0 - 24V)	12	OUT 0	(open drain)