Allied Vision



HR CoaXPress

hr455CCX

□□	
□□	hr455CCX
□□ □□	F004097
□□ □□□	HR CoaXPress
□□	Available

□□	
□□ □□	Area scan
□□□	Color
□□□□	Visible
□□□□ □□	400 nm to 1000 nm
□□□	9,568 × 6,380 (61.00 MP)
□□ □□	Sony IMX455
□□ □□□□ (□□)	cmos
□□ □□	Rolling shutter (RS)
□□ □□	35.98 × 23.99 mm (43.24 mm, Type 2.7)
□□ □□	3.76 µm × 3.76 µm

□□ □□	
□□ □□ □□	8-bit, 10-bit, 12-bit, 16-bit
RGB □□ □□	bayer8, bayer10, bayer12, bayer16

□□□ □□	
□□□□ □□□	81.4 dB
SNR	47 dB

□□□ □ □□

□□ □□□ □□	18 fps
□□ □□	34 µs to 60 s
□□	0.0 dB to 36.0 dB

I/O □ □□

□□□ □□	0 x LVDS input, 0 x LVDS output, 0 x TTL input, 0 x TTL output, 2 x 24V input, 4 x Open drain output,
□□ □□□ □□	1 x RS232 input, 1 x RS232 output, 0 x RS422 input, 0 x RS422 output,
□□□ □□	1 x Optical isolated input, 0 x Optical isolated input,
I/O □□□	12-pin Hirose HR10A-10P-12S
□□ □□ □□	10 to 25VDC, Power over CoaXPress
□□ □□	External: 14 W (typical)

□□ □□

□□ □□	-10 °C to 45 °C (□□, □□ □□)

□□□ □□

□□ □□ (L x W x H mm)	78 × 70 × 70
□□/□□ □□	N-BK7 - AR coating
IP □□	IP30
□□ □□□	M58x0.75
□□	420 g

□□□ □□□ □ FPGA

□□□□ □□□ (□□□)	160 MByte

□□□□□

□□□ □□□□□	cxp-6 with 4 connections
□□□□□ □□□	(Din1.0/2.3)
□□ □□	CoaXPress 1.0

FW □□ - □□□ □□

□□ □□	manual, auto
□□ □□	auto, manual

FW □□ - □□□ □□

□□□ □□□ □□	auto, manual
□□□ □□ □□	roi, lut, mirror-image, dpc, shading-correction, ffc

FW □□ - □□□ □□

□□□ □□/□□□	internal, software, external
□□□ □□ □□	PoCxP, User Sets, PWM(4), Sequencer,

Quantum Efficiency

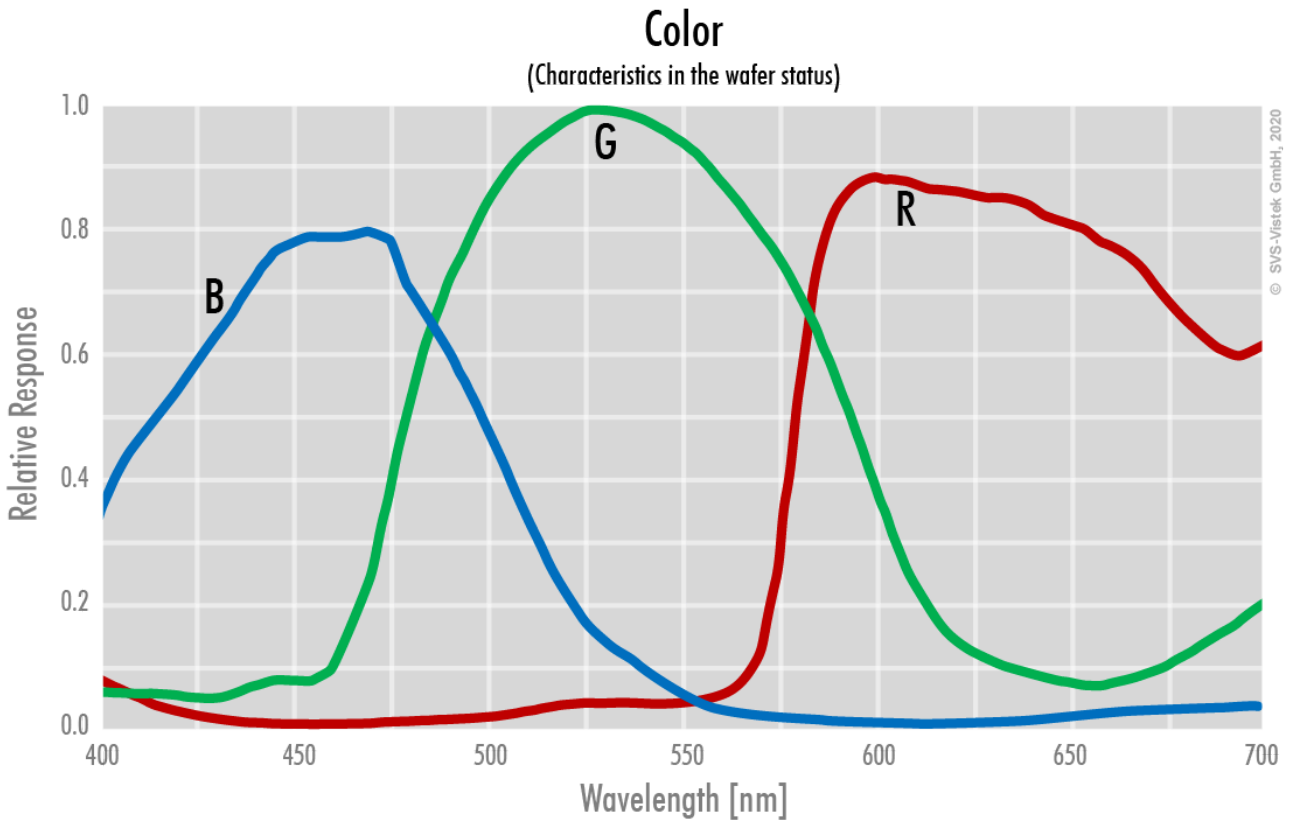

Technical Drawing

front

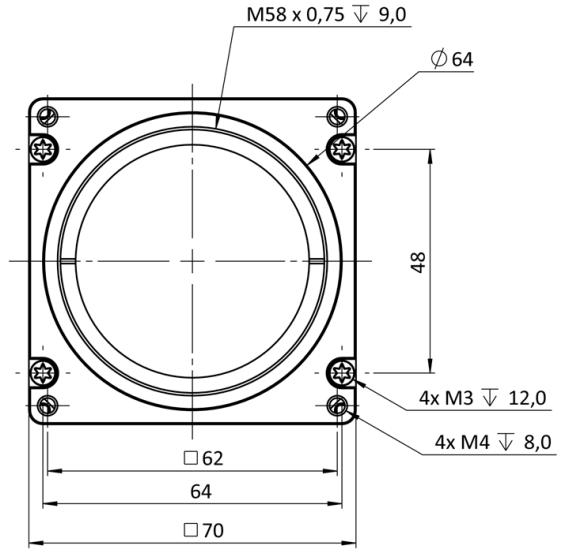

back

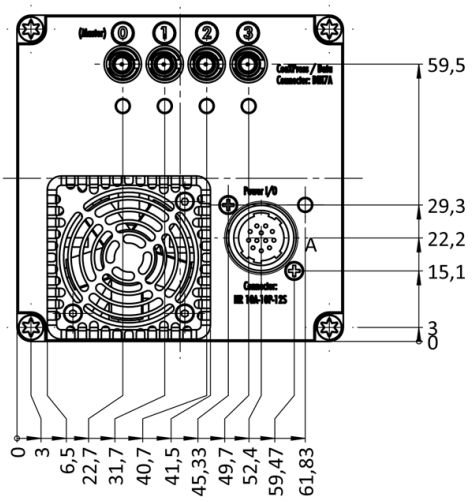

cross section

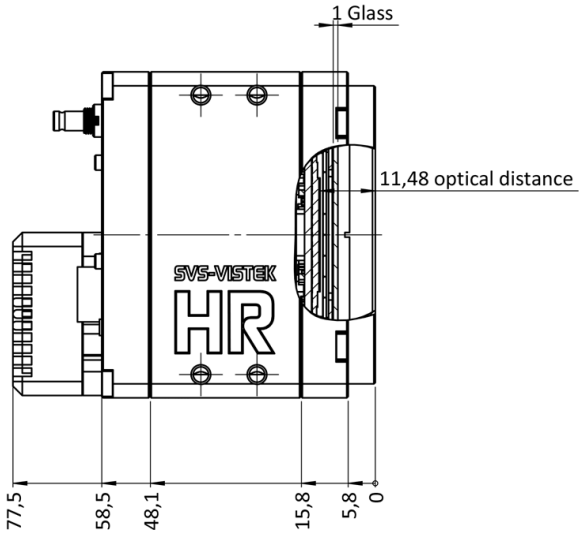

right side

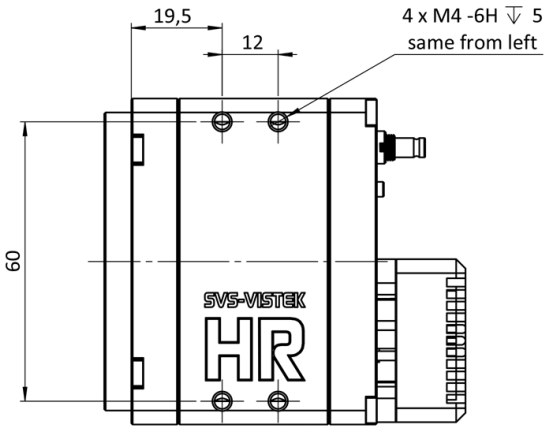

top

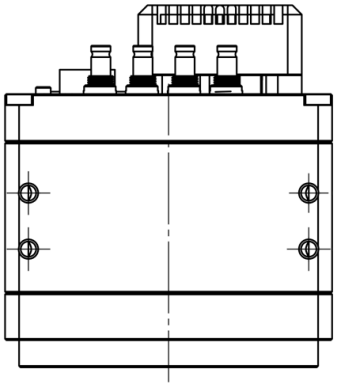

bottom

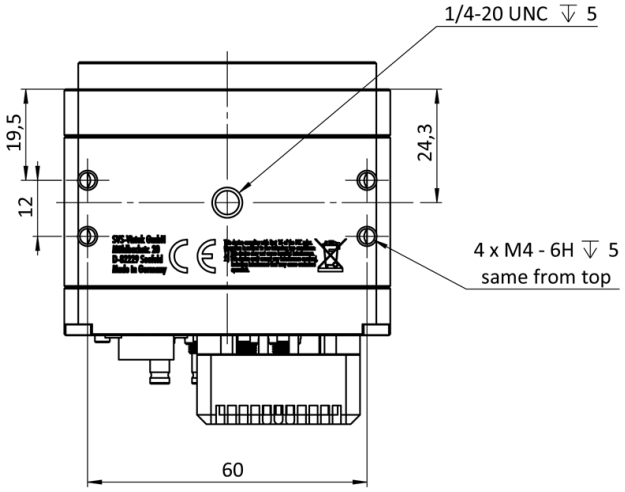

3D

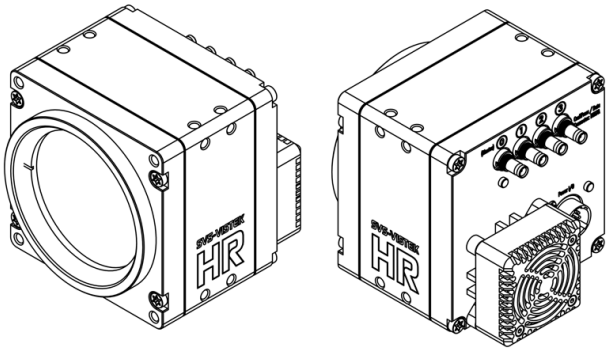

I/O pin assignment

Hirose 12 Pin

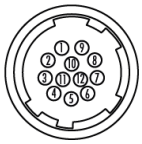

1	VIN –	(GND)	7	OUT 1	(open drain)
2	VIN +	(10 V to 25 V DC)	8	OUT 2	(open drain)
3	IN 4	(RXD RS232)	9	IN 3 +	(opto In +)
4	OUT 4	(TXD RS232)	10	IN 3 –	(opto In –)
5	IN 1	(0 - 24V)	11	OUT 3	(open drain)
6	IN 2	(0 - 24V)	12	OUT 0	(open drain)