Allied Vision



HR Camera Link

hr25CCL

□□	
□□	hr25CCL
□□ □□	F004052
□□ □□□	HR Camera Link
□□	Available

□□	
□□ □□	Area scan
□□□	Color
□□□□	Visible
□□□□ □□	400 nm to 1000 nm
□□□	5,120 × 5,120 (25.00 MP)
□□ □□	ON Semi PYTHON 25K
□□ □□□□ (□□)	cmos
□□ □□	Global shutter (GS)
□□ □□	23.04 × 23.04 mm (32.58 mm, Type APS-H)
□□ □□	4.50 µm × 4.50 µm

□□ □□	
□□ □□ □□	8-bit, 10-bit
RGB □□ □□	bayer8, bayer10

□□□ □ □□	
□□ □□□ □□	31.8 fps
□□ □□	21 µs to 60 s
□□	0.0 dB to 18.0 dB

I/O 및 □□

□□□ □□	0 x LVDS input, 0 x LVDS output, 0 x TTL input, 0 x TTL output, 2 x 24V input, 4 x Open drain output,
□□ □□□ □□	1 x RS232 input, 1 x RS232 output, 0 x RS422 input, 0 x RS422 output,
□□□ □□	1 x Optical isolated input, 0 x Optical isolated input,
I/O □□□	12-pin Hirose HR10A-10P-12S
□□ □□ □□	10 to 25VDC
□□ □□	External: 10 W (typical)

□□ □□

□□ □□	-10 °C to 65 °C (□□□)

□□□ □□

□□ □□ (L x W x H mm)	56 × 70 × 70
IP □□	IP40
□□ □□□	M58x0.75
□□	420 g

□□□ □□□ 및 FPGA

□□□□ □□□ (□□□)	32 MByte

□□□□□

□□□ □□□□□	camera link 80-bit
□□□□□ □□□	SDR

FW □□ - □□□ □□

□□ □□	manual, auto, external
□□ □□	auto, manual
□□□ □□□ □□	auto, manual
□□□ □□ □□	lut, mirror-image, dpc, shading-correction, ffc

FW □□ - □□□ □□

□□□ □□/□□□	internal, software, external
□□□ □□ □□	User Sets, PWM(4), Sequencer,

Quantum Efficiency

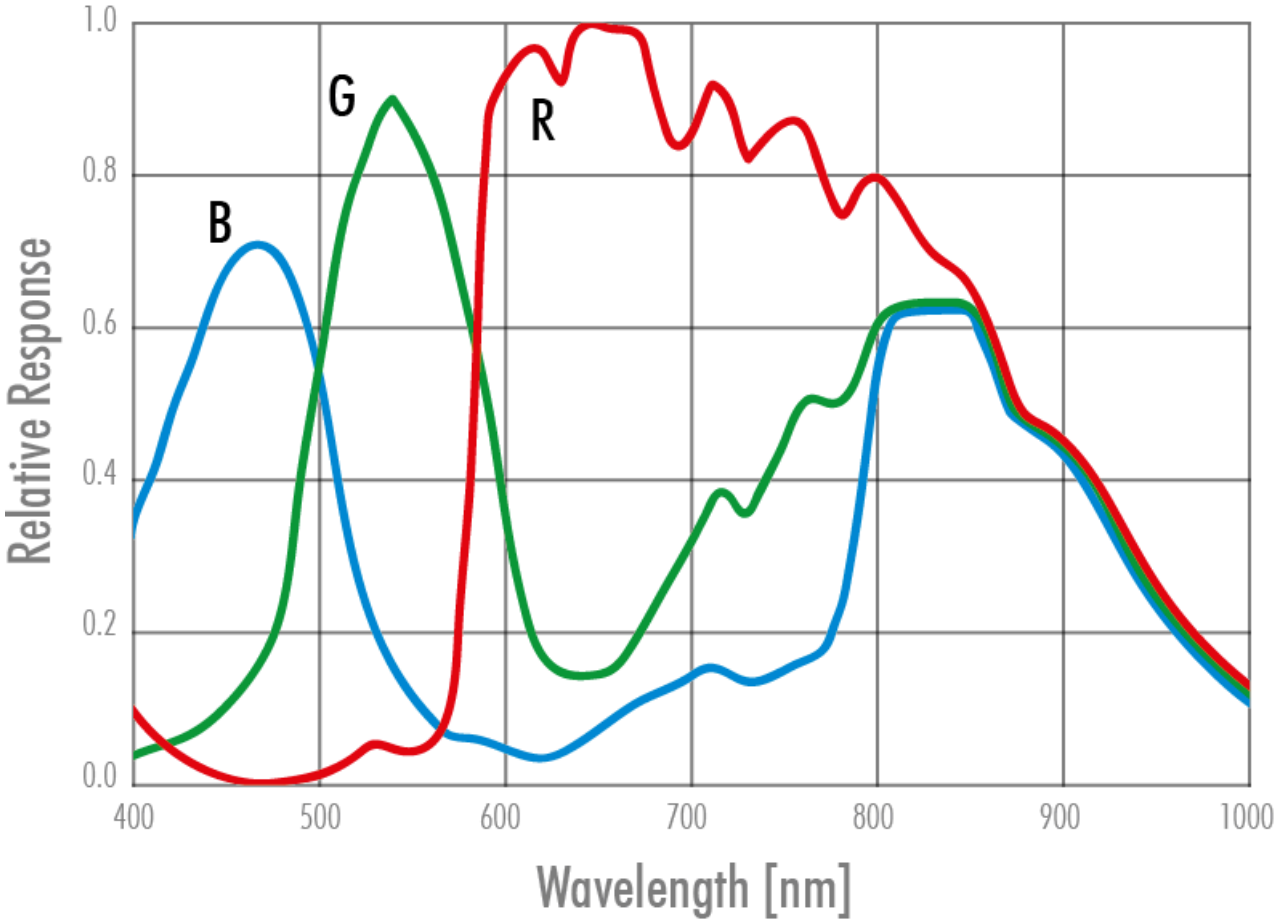

Allied Vision

Technical Drawing

front view

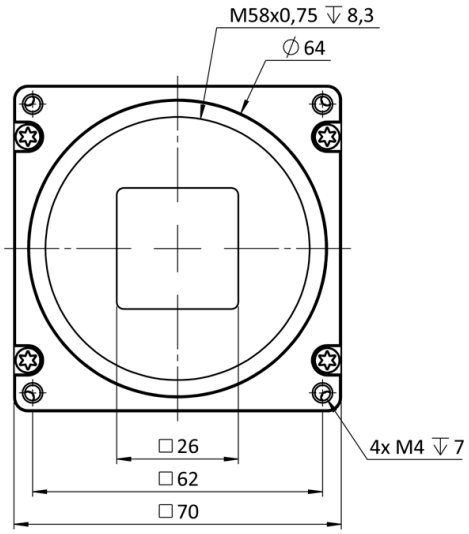

back view

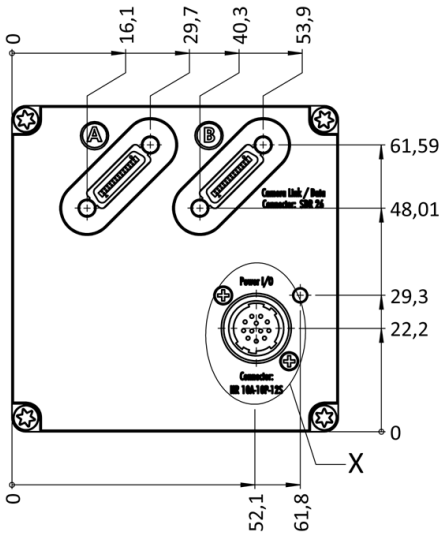

cross section

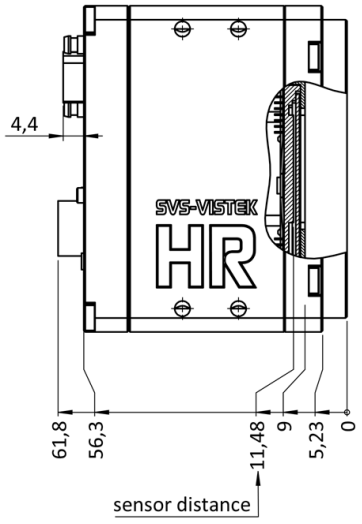

right view

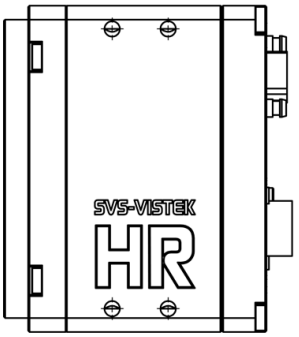

top view

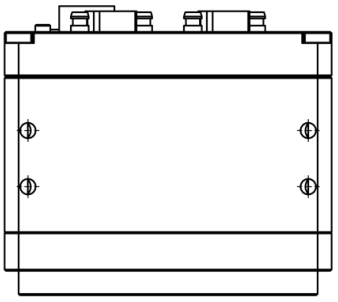

bottom view

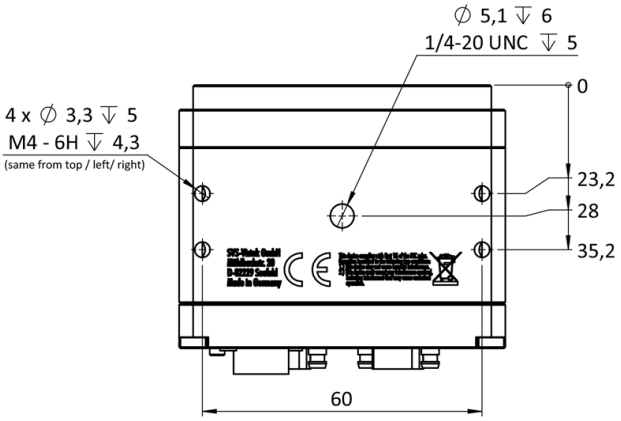

3D view



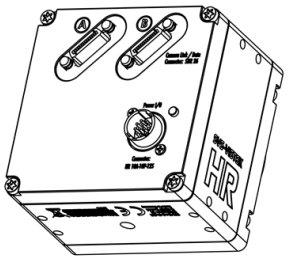

I/O pin assignment

Hirose 12 Pin

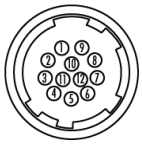

1	VIN –	(GND)	7	OUT 1	(open drain)
2	VIN +	(10 V to 25 V DC)	8	OUT 2	(open drain)
3	IN 4	(RXD RS232)	9	IN 3 +	(opto In +)
4	OUT 4	(TXD RS232)	10	IN 3 –	(opto In –)
5	IN 1	(0 - 24V)	11	OUT 3	(open drain)
6	IN 2	(0 - 24V)	12	OUT 0	(open drain)