

HR 10GigE

hr455MXGE-T

□□	
□□	hr455MXGE-T
□□ □□	F004217
□□ □□□	HR 10GigE
□□	Available

□□	
□□ □□	Area scan
□□□	Mono
□□□□	Visible
□□□□ □□	400 nm to 1000 nm
□□□	9,568 × 6,380 (61.00 MP)
□□ □□	Sony IMX455
□□ □□□□ (□□)	cmos
□□ □□	Rolling shutter (RS)
□□ □□	35.98 × 23.99 mm (43.24 mm, Type 2.7)
□□ □□	3.76 µm × 3.76 µm

□□ □□	
□□ □□ □□	8-bit, 12-bit, 16-bit
□□□□ □□ □□	mono8, mono12, mono16

□□□ □□	
□□□□ □□□	81.4 dB
SNR	47 dB

□□□ □ □□

□□ □□□ □□	18 fps
□□ □□	34 µs to 60 s
□□	0.0 dB to 36.0 dB

I/O □ □□

□□□ □□	0 x LVDS input, 0 x LVDS output, 0 x TTL input, 0 x TTL output, 2 x 24V input, 4 x Open drain output,
□□ □□□ □□	1 x RS232 input, 1 x RS232 output, 0 x RS422 input, 0 x RS422 output,
□□□ □□	1 x Optical isolated input, 0 x Optical isolated input,
I/O □□□	12-pin Hirose HR10A-10P-12S
□□ □□ □□	21 to 25VDC, Power over Ethernet (POE+)
□□ □□	External: 30 W (typical)

□□ □□

□□ □□	-10 °C to 70 °C (□□□)

□□□ □□

□□ □□ (L x W x H mm)	94 × 70 × 70
□□/□□ □□	N-BK7 - AR coating
IP □□	IP30
□□ □□□	M58x0.75
□□	590 g

□□□ □□□ □ FPGA

□□□ □□ (RAM)	448 MByte

□□□□□

□□□ □□□□□	10gige
□□□□□ □□□	(RJ-45)
□□ □□	GigE Vision 2.0

FW □□ - □□□ □□

□□ □□	manual, auto, external
□□ □□	auto, manual

FW □□ - □□□ □□

□□□ □□ □□	lut, mirror-image, dpc, shading-correction, ffc

FW □□ - □□□ □□

□□□ □□/□□□	internal, software, external
□□□ □□ □□	User Sets, POE, PWM(4), Sequencer,

Quantum Efficiency

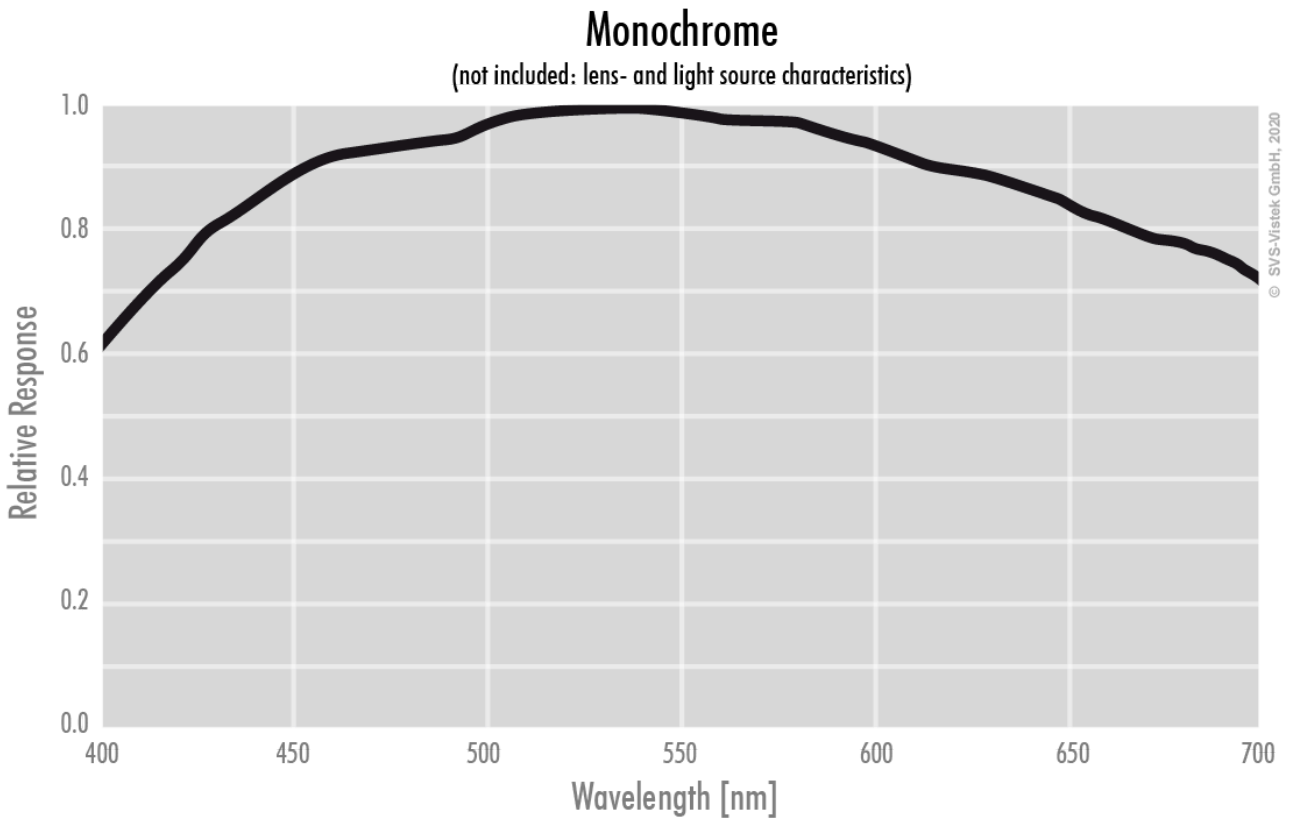

Technical Drawing

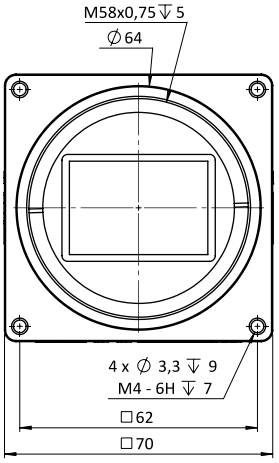

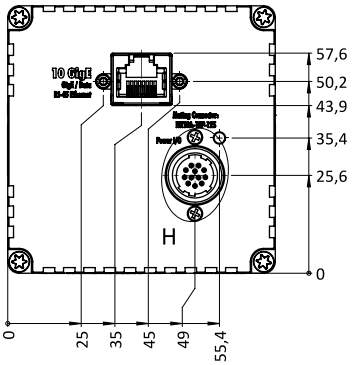

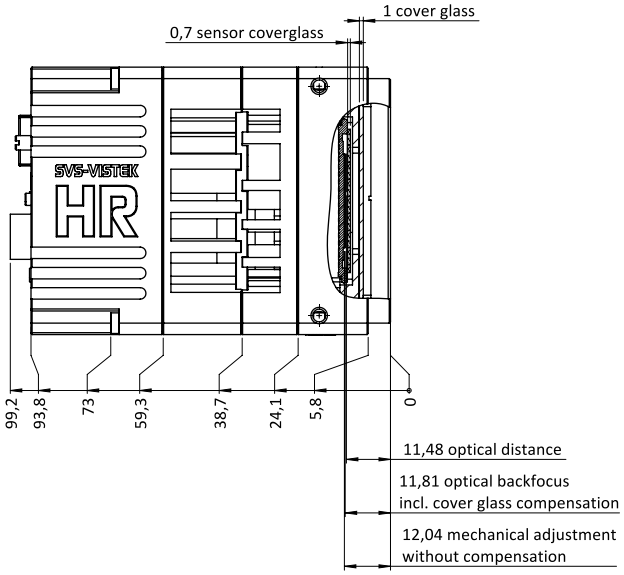

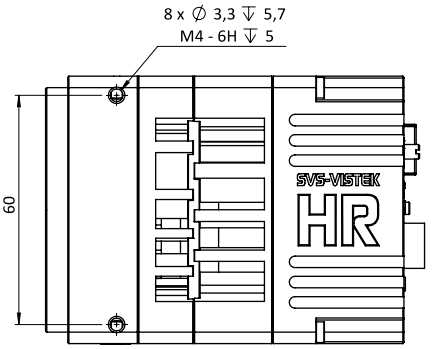

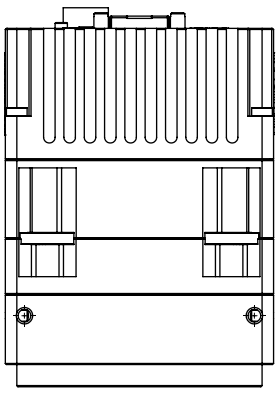

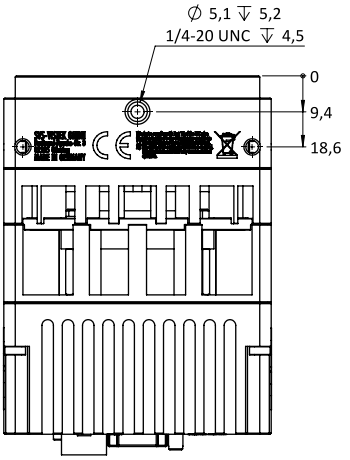

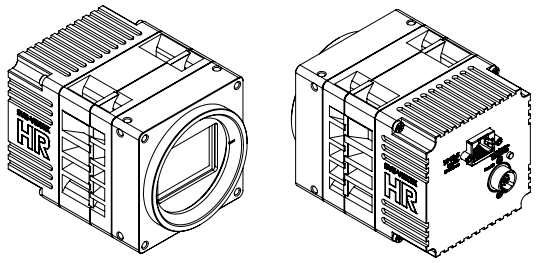

I/O pin assignment

Hirose 12 Pin

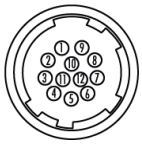

1	VIN –	(GND)	7	OUT 1	(open drain)
2	VIN +	(10 V to 25 V DC)	8	OUT 2	(open drain)
3	IN 4	(RXD RS232)	9	IN 3 +	(opto In +)
4	OUT 4	(TXD RS232)	10	IN 3 –	(opto In –)
5	IN 1	(0 - 24V)	11	OUT 3	(open drain)
6	IN 2	(0 - 24V)	12	OUT 0	(open drain)