Allied Vision



# HR 10GigE

## hr65CXGE-G2

| □□ | |
|---|---|
| □□ | hr65CXGE-G2 |
| □□ □□ | F004148 |
| □□ □□□ | HR 10GigE |
| □□ | Deleted |

| □□ | |
|---|---|
| □□ □□ | Area scan |
| □□□ | Color |
| □□□□ | Visible |
| □□□□ □□ | 400 nm to 1000 nm |
| □□□ | 9,344 × 7,000 (65.00 MP) |
| □□ □□ | Gpixel GMAX3265 |
| □□ □□□□ (□□) | cmos |
| □□ □□ | Global shutter (GS) |
| □□ □□ | 29.9 × 22.4 mm (37.36 mm, Type 2.3) |
| □□ □□ | 3.20 µm × 3.20 µm |

| □□ □□ | |
|---|---|
| □□ □□ □□ | 8-bit, 12-bit |
| RGB □□ □□ | bayer8, bayer12 |

| □□□ □□ | |
|---|---|
| □□□□ □□□ | 65.6 dB |
| SNR | 40 dB |

## □□□ □ □□

| | |
|---|---|
| □□ □□□ □□ | 17.4 fps |
| □□ □□ | 22 µs to 60 s |
| □□ | 0.0 dB to 18.0 dB |

## I/O □ □□

| | |
|---|---|
| □□□ □□ | 0 x LVDS input, 0 x LVDS output, 0 x TTL input, 0 x TTL output, 2 x 24V input, 4 x Open drain output, |
| □□ □□□ □□ | 1 x RS232 input, 1 x RS232 output, 0 x RS422 input, 0 x RS422 output, |
| □□□ □□ | 1 x Optical isolated input, 0 x Optical isolated input, |
| I/O □□□ | 12-pin Hirose HR10A-10P-12S |
| □□ □□ □□ | 10 to 25VDC, Power over Ethernet (POE+, in option -P) |
| □□ □□ | External: 15 W (typical) |

## □□ □□

| | |
|---|---|
| □□ □□ (□□□) | -10 °C to 65 °C |

## □□□ □□

| | |
|---|---|
| □□ □□ (L x W x H mm) | 76 × 70 × 70 |
| □□/□□ □□ | IR-Cut 680 |
| IP □□ | IP30 |
| □□ □□□ | M58x0.75 |
| □□ | 420 g |

## □□□ □□□ □ FPGA

| | |
|---|---|
| □□□ □□ (RAM) | 448 MByte |
| □□□□ □□□ (□□□) | 32 MByte |

## □□□□□

| | |
|---|---|
| □□□ □□□□□ | 10gige |
| □□□□□ □□□ | (RJ-45) |
| □□ □□ | GigE Vision 2.0 |

## FW □□ - □□□ □□

| | |
|---|---|
| □□ □□ | manual, auto |

## FW 기능 - 이미지 제어

| | |
|---|---|
| 게인 모드 | auto, manual |
| 화이트 밸런스 모드 | auto, manual |
| 이미지 제어 기능 | roi, lut, mirror-image |

## FW 기능 - 카메라 제어

| | |
|---|---|
| 트리거 모드/동기화 | internal, software, external |
| 카메라 제어 기능 | User Sets, POE, PWM(4), Sequencer, |

## Quantum Efficiency

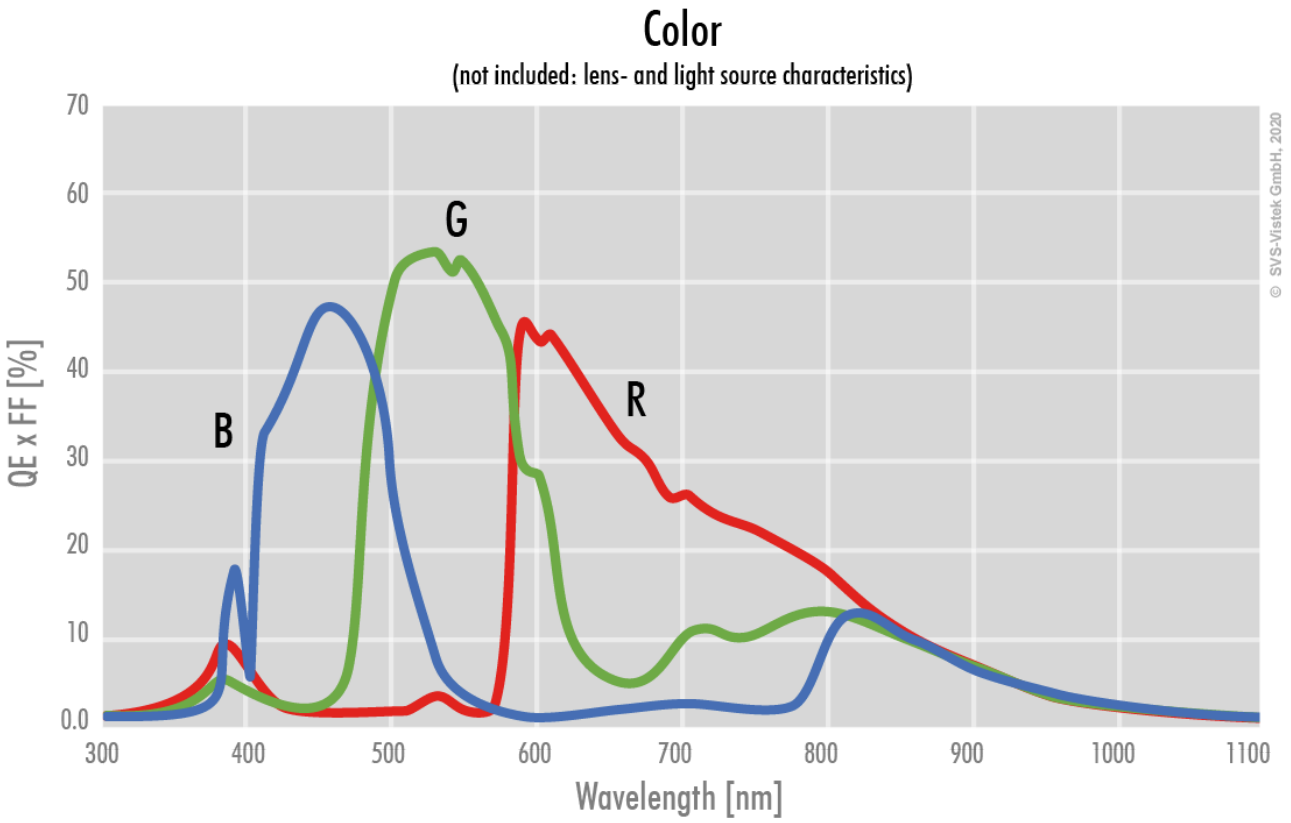

Allied Vision

## Technical Drawing

### front

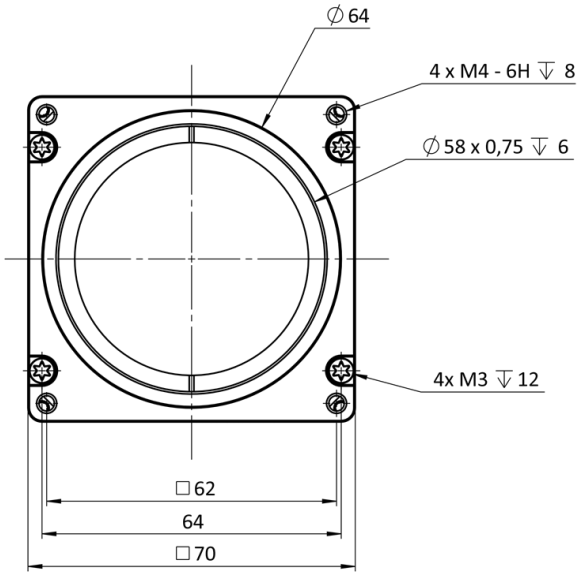


### back

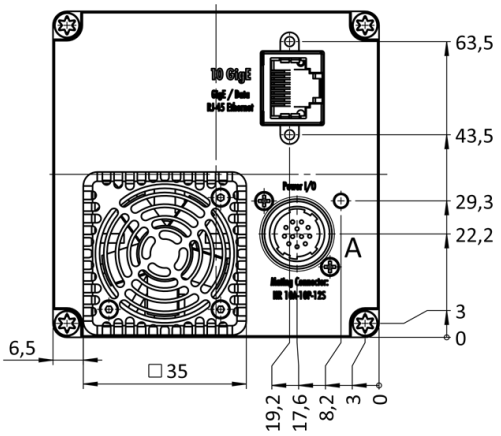


### cross section

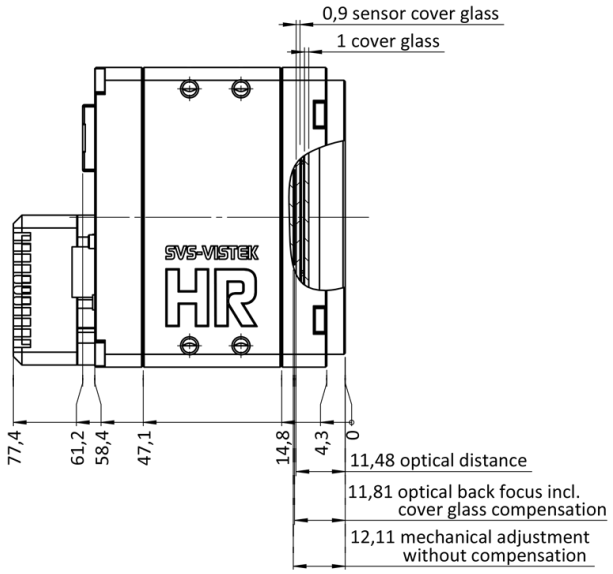


### right side

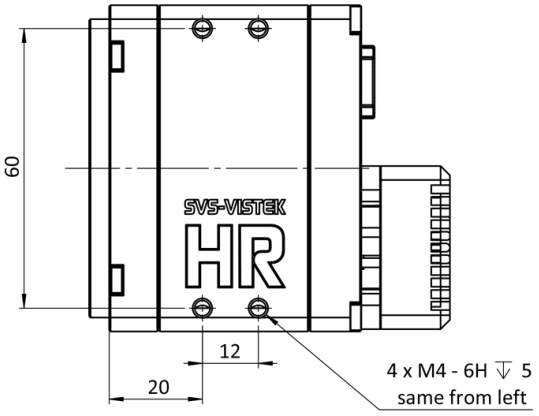

top

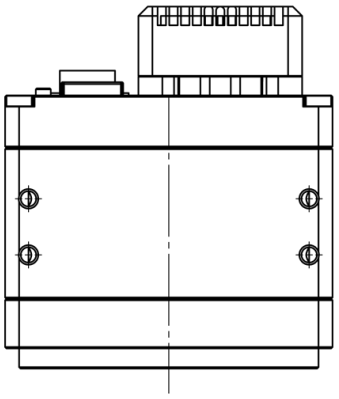

bottom

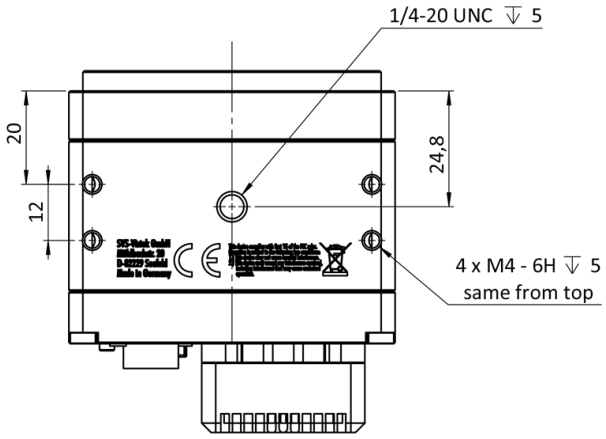


3D

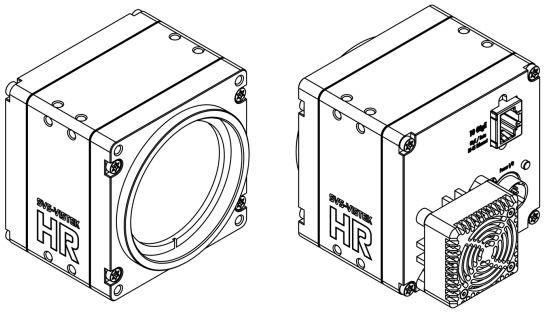

## I/O pin assignment

Hirose 12 Pin

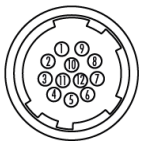

| | | |
|---|---|---|
| 1 | VIN – | (GND) |
| 2 | VIN + | (10 V to 25 V DC) |
| 3 | IN 4 | (RXD RS232) |
| 4 | OUT 4 | (TXD RS232) |
| 5 | IN 1 | (0 - 24V) |
| 6 | IN 2 | (0 - 24V) |
| 7 | OUT 1 | (open drain) |
| 8 | OUT 2 | (open drain) |
| 9 | IN 3 + | (opto In + ) |
| 10 | IN 3 – | (opto In –) |
| 11 | OUT 3 | (open drain) |
| 12 | OUT 0 | (open drain) |