

Allied Vision

HR 10GigE

hr387MXGE

일반	
모델	hr387MXGE
제품 코드	F004075
제품 시리즈	HR 10GigE
상태	Available

센서	
센서 유형	Area scan
크로마	Mono
스펙트럼	Visible
스펙트럼 범위	400 nm to 1000 nm
해상도	5,440 × 3,076 (16.70 MP)
센서 모델	Sony IMX387
센서 아키텍처 (소재)	cmos
셔터 유형	Global shutter (GS)
센서 크기	18.77 × 10.61 mm (21.56 mm, Type 4/3)
픽셀 크기	3.45 µm × 3.45 µm

픽셀 형식	
센서 비트 심도	8-bit, 12-bit
모노크롬 픽셀 형식	mono8, mono12

타이밍 및 게인	
최대 프레임 속도	56.4 fps
노출 시간	21 µs to 60 s
게인	0.0 dB to 48.0 dB

I/O 및 □□

□□□ □□	0 x LVDS input, 0 x LVDS output, 0 x TTL input, 0 x TTL output, 2 x 24V input, 4 x Open drain output,
□□ □□□ □□	1 x RS232 input, 1 x RS232 output, 0 x RS422 input, 0 x RS422 output,
□□□ □□	1 x Optical isolated input, 0 x Optical isolated input,
I/O □□□	12-pin Hirose HR10A-10P-12S
□□ □□ □□	10 to 25VDC, Power over Ethernet (POE+, in option -P)
□□ □□	External: 15.5 W (typical)

□□□ □□

□□ □□ (L x W x H mm)	80 × 70 × 70
□□/□□ □□	N-BK7 - AR coating 380-850nm
IP □□	IP30
□□ □□□	M58x0.75
□□	400 g

□□□ □□□ 및 FPGA

□□□ □□ (RAM)	448 MByte
□□□□ □□□ (□□□)	32 MByte

□□□□□

□□□ □□□□□□	10gige
□□□□□ □□□	(RJ-45)
□□ □□	GigE Vision 2.0

FW □□ - □□□ □□

□□ □□	manual, auto, external
□□ □□	auto, manual
□□□ □□ □□	lut, mirror-image, dpc, shading-correction, ffc

FW □□ - □□□ □□

□□□ □□/□□□	internal, software, external
□□□ □□ □□	User Sets, POE, PWM(4), Sequencer,

Quantum Efficiency

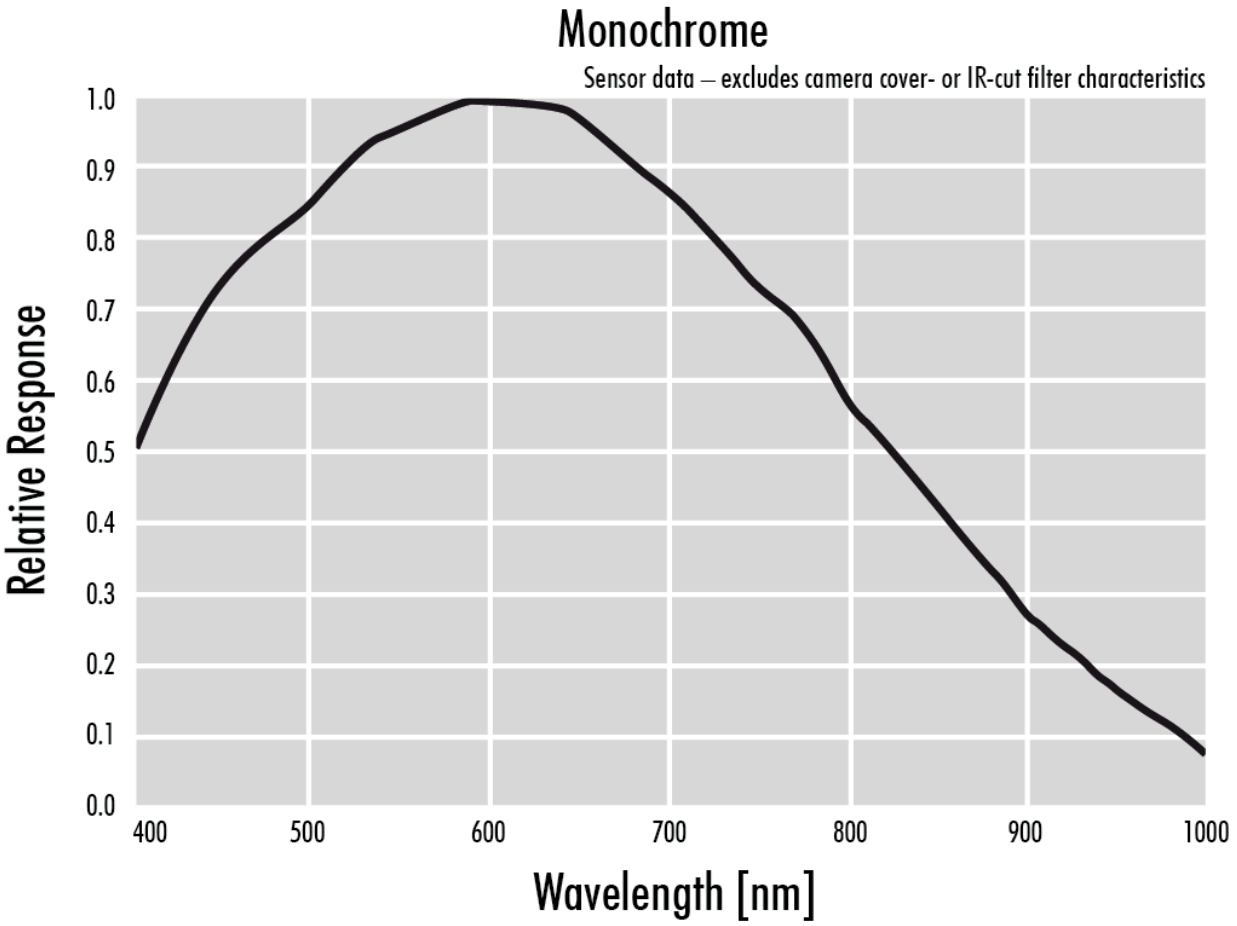

Allied Vision

Technical Drawing

front view

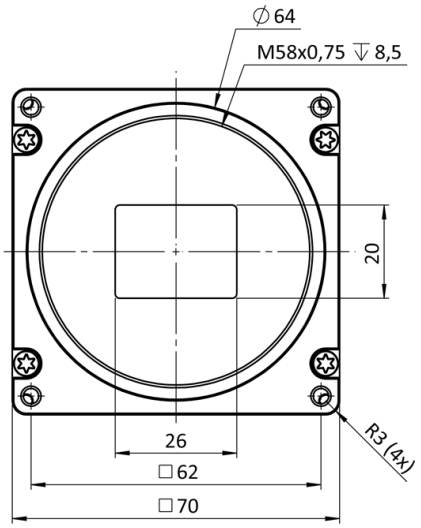

back view

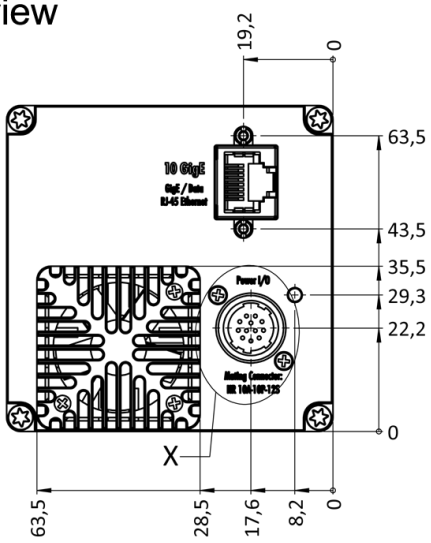

cross section

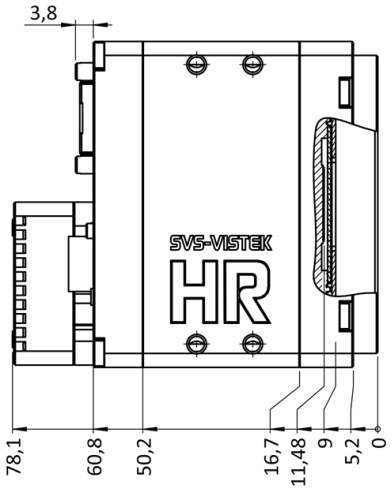

right view

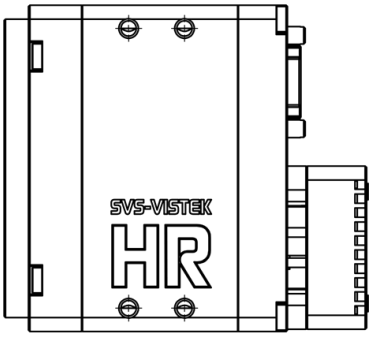

top view

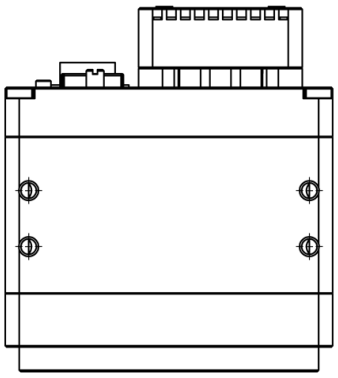

bottom view

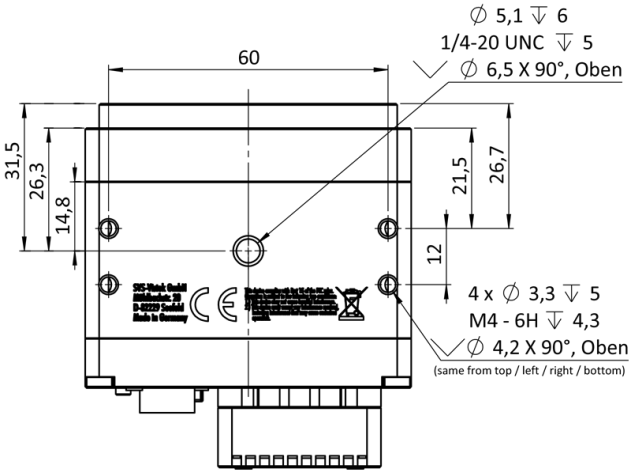

3D view

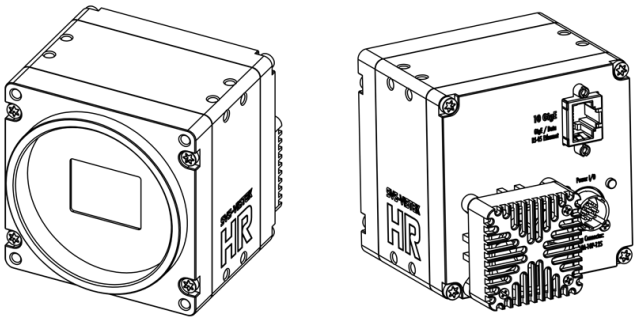

I/O pin assignment

Hirose 12 Pin

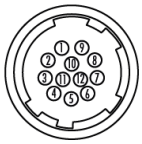

1	VIN –	(GND)	7	OUT 1	(open drain)
2	VIN +	(10 V to 25 V DC)	8	OUT 2	(open drain)
3	IN 4	(RXD RS232)	9	IN 3 +	(opto In +)
4	OUT 4	(TXD RS232)	10	IN 3 –	(opto In –)
5	IN 1	(0 - 24V)	11	OUT 3	(open drain)
6	IN 2	(0 - 24V)	12	OUT 0	(open drain)