

Allied Vision

HR 100GigE

hr929C100GE

Preliminary product information. Features and technical specifications are subject to change without notice.

일반	
모델	hr929C100GE
제품 코드	F004279
제품 시리즈	HR 100GigE
상태	Coming soon

센서	
센서 유형	Area scan
크로마	Color
스펙트럼	Visible
스펙트럼 범위	400 nm to 1000 nm
해상도	8,200 × 6,152 (50.40 MP)
센서 모델	Sony IMX929
센서 아키텍처 (소재)	cmos
셔터 유형	Global shutter (GS)
센서 크기	22.47 × 16.86 mm (28.09 mm, Type 1.8)
픽셀 크기	2.74 µm × 2.74 µm

픽셀 형식	
센서 비트 심도	8-bit, 10-bit, 12-bit
RGB 픽셀 형식	bayer8, bayer10, bayer12

타이밍 및 게인	
최대 프레임 속도	225 fps
노출 시간	8 µs to 60 s
게인	0.0 dB to 48.0 dB

preliminary

Allied Vision

I/O □ □□

□□□ □□	0 x LVDS input, 0 x LVDS output, 0 x TTL input, 0 x TTL output, 2 x 24V input, 2 x Open drain output,
□□ □□□ □□	0 x RS232 input, 0 x RS232 output, 1 x RS422 input, 1 x RS422 output,
□□□ □□	0 x Optical isolated input, 0 x Optical isolated input,
I/O □□□	12-pin Hirose HR10A-10P-12S
□□ □□ □□	24 to 25VDC
□□ □□	External: 27 W (typical)

□□ □□

□□ □□	-10 °C to 60 °C (□□□)

□□□ □□

□□ □□ (L x W x H mm)	93 × 62 × 62
□□/□□ □□	IR-Cut - 680nm
IP □□	IP30
□□ □□□	M58x0.75
□□	550 g

□□□ □□□ □ FPGA

□□□ □□ (RAM)	4032 MByte
□□□□ □□□ (□□□)	32768 MByte

□□□□□

□□□ □□□□□	100gige
□□□□□ □□□	(QSFP28)
□□ □□	GigE Vision 3.0

FW □□ - □□□ □□

□□ □□	manual, auto, external
□□ □□	auto, manual
□□□ □□□ □□	auto, manual
□□□ □□ □□	roi, lut, color-transformation, mirror-image

preliminary

FW 기능 - 카메라 제어

카메라 제어 기능	PTP, RDMA support, User Sets, PWM(4), Sequencer,

preliminary

Allied Vision

Quantum Efficiency

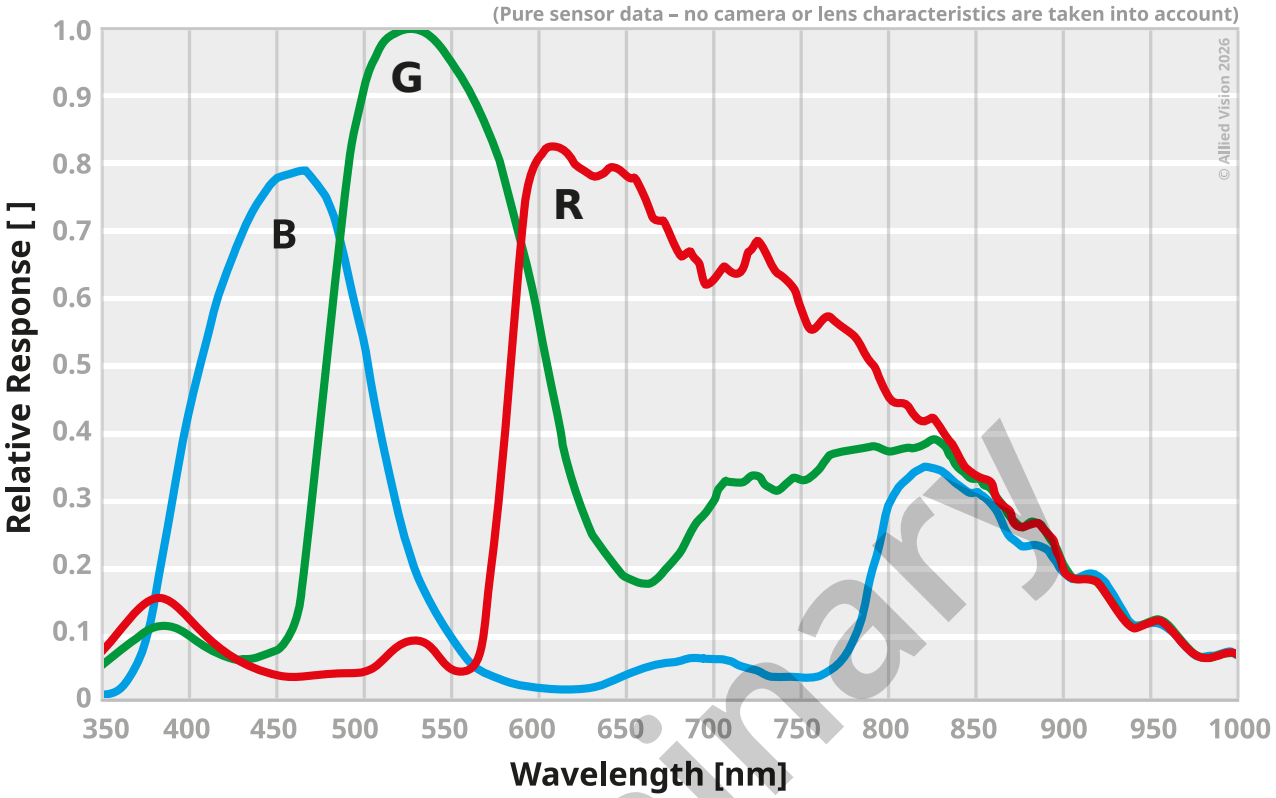

preliminary

Technical Drawing

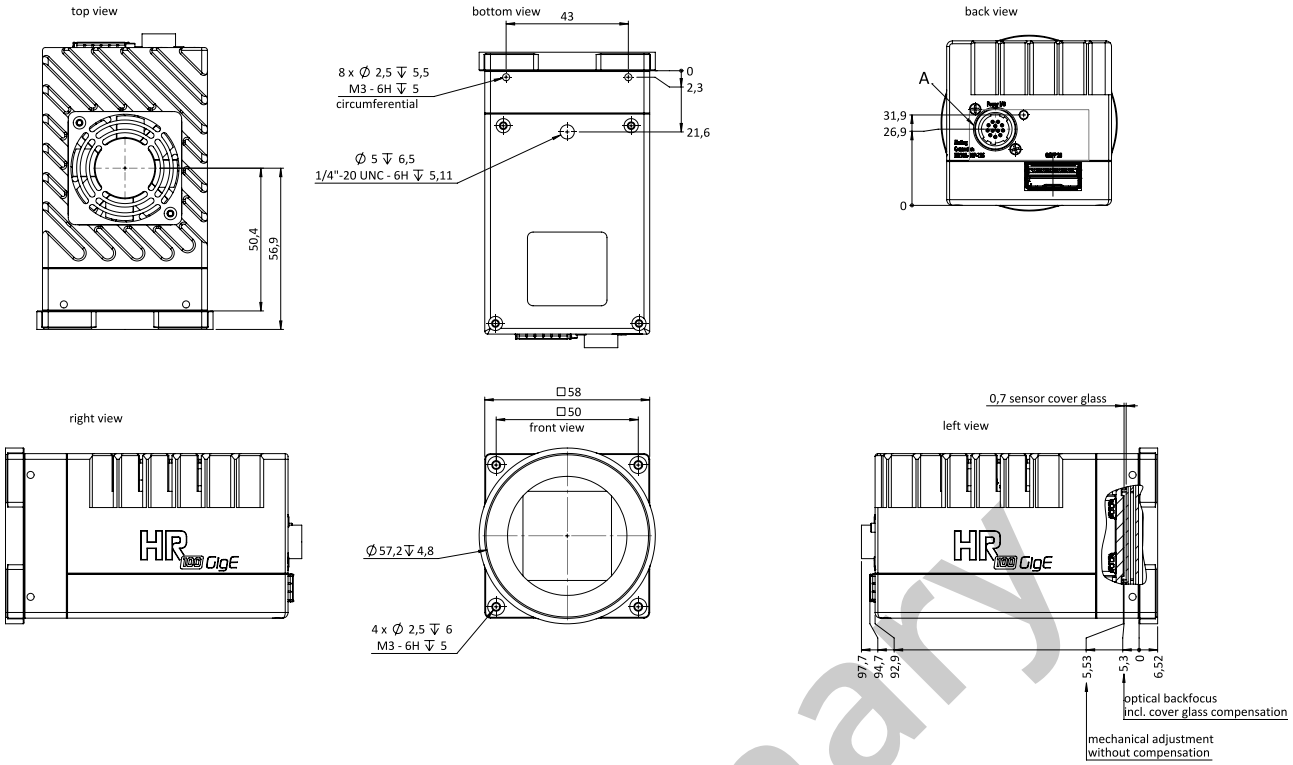

I/O pin assignment

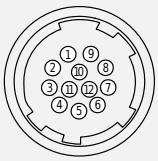

1	VIn- (GND)
2	VIn+ (24 V DC)
3	In 4 (RxD RS232)
4	Out 4 (TxD RS232)
5	In 1 (0 ... 24 V)
6	In 2 (0 ... 24 V)
7	Out 1 (open drain)
8	Out 2 (open drain)
9	In 3+(opto In+)
10	In 3-(opto In-)
11	Out 3 (open drain)
12	Out 0 (open drain)

preliminary