HR 100GigE

hr927C100GE



Preliminary product information. Features and technical specifications are subject to change without notice.

□□	
□□	hr927C100GE
□□ □□	F004275
□□ □□□	HR 100GigE
□□	Prototype/engineering sample

□□	
□□ □□	Area scan
□□□	Color
□□□□	Visible
□□□□ □□	400 nm to 1000 nm
□□□	10,240 × 10,240 (104.90 MP)
□□ □□	Sony IMX927
□□ □□□□ (□□)	cmos
□□ □□	Global shutter (GS)
□□ □□	28.06 × 28.06 mm (39.68 mm, Type 2.5)
□□ □□	2.74 µm × 2.74 µm

□□ □□	
□□ □□ □□	8-bit, 10-bit, 12-bit
RGB □□ □□	bayer8, bayer10, bayer12

□□□ □ □□	
□□ □□□ □□	111.8 fps
□□ □□	8 µs to 60 s
□□	0.0 dB to 48.0 dB

preliminary

I/O 및 □□

□□□ □□	0 x LVDS input, 0 x LVDS output, 0 x TTL input, 0 x TTL output, 2 x 24V input, 2 x Open drain output,
□□ □□□ □□	0 x RS232 input, 0 x RS232 output, 1 x RS422 input, 1 x RS422 output,
□□□ □□	0 x Optical isolated input, 0 x Optical isolated input,
I/O □□□	12-pin Hirose HR10A-10P-12S
□□ □□ □□	24 to 25VDC
□□ □□	External: 30 W (typical)

□□ □□

□□ □□	-10 °C to 60 °C (□□□)

□□□ □□

□□ □□ (L x W x H mm)	93 × 62 × 62
□□/□□ □□	IR-Cut - 680nm
IP □□	IP30
□□ □□□	M58x0.75
□□	550 g

□□□ □□□ 및 FPGA

□□□ □□ (RAM)	4032 MByte
□□□□ □□□ (□□□)	32768 MByte

□□□□□

□□□ □□□□□□	100gige
□□□□□ □□□	(QSFP28)
□□ □□	GigE Vision 3.0

FW □□ - □□□ □□

□□ □□	manual, auto, external
□□ □□	auto, manual
□□□ □□□ □□	auto, manual
□□□ □□ □□	roi, lut, color-transformation, mirror-image

preliminary

FW □□ - □□□ □□

□□□ □□ □□	PTP, RDMA support, User Sets, PWM(4), Sequencer,

preliminary

Allied Vision

Quantum Efficiency

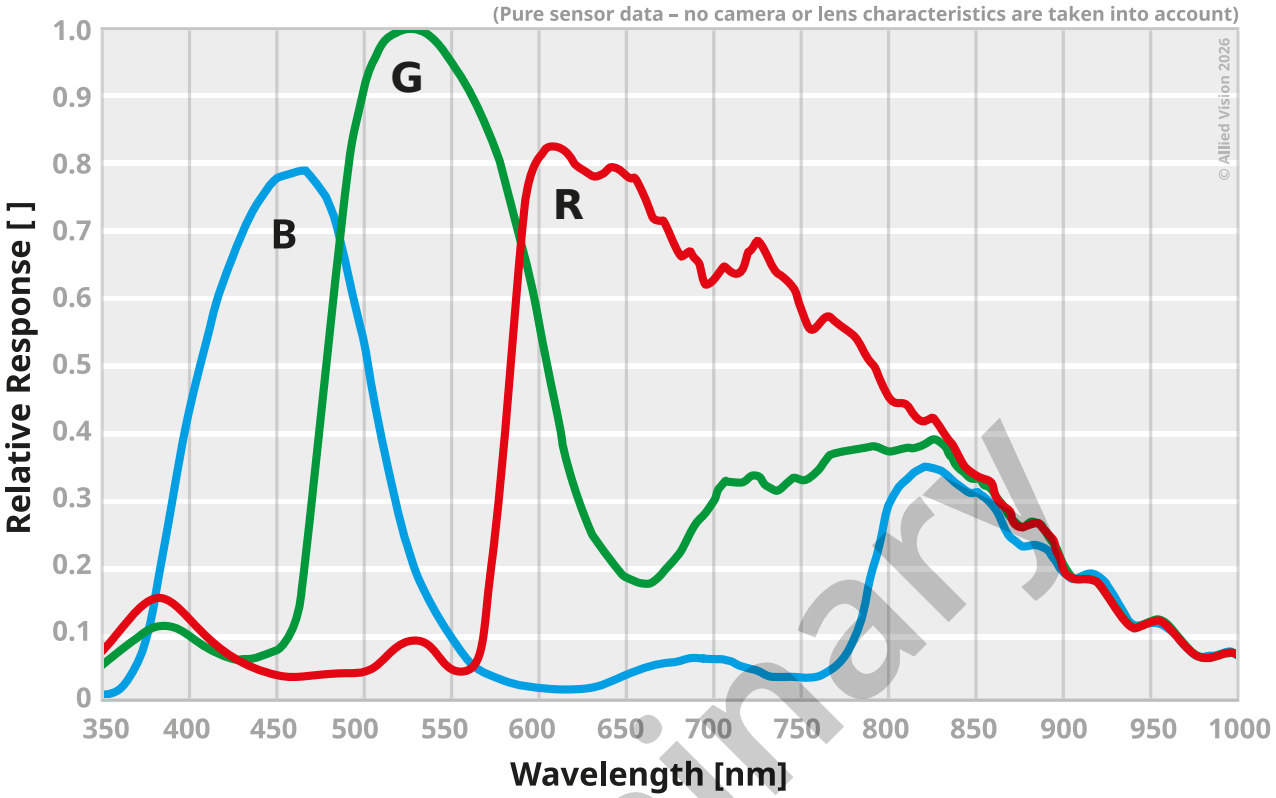

preliminary

Technical Drawing

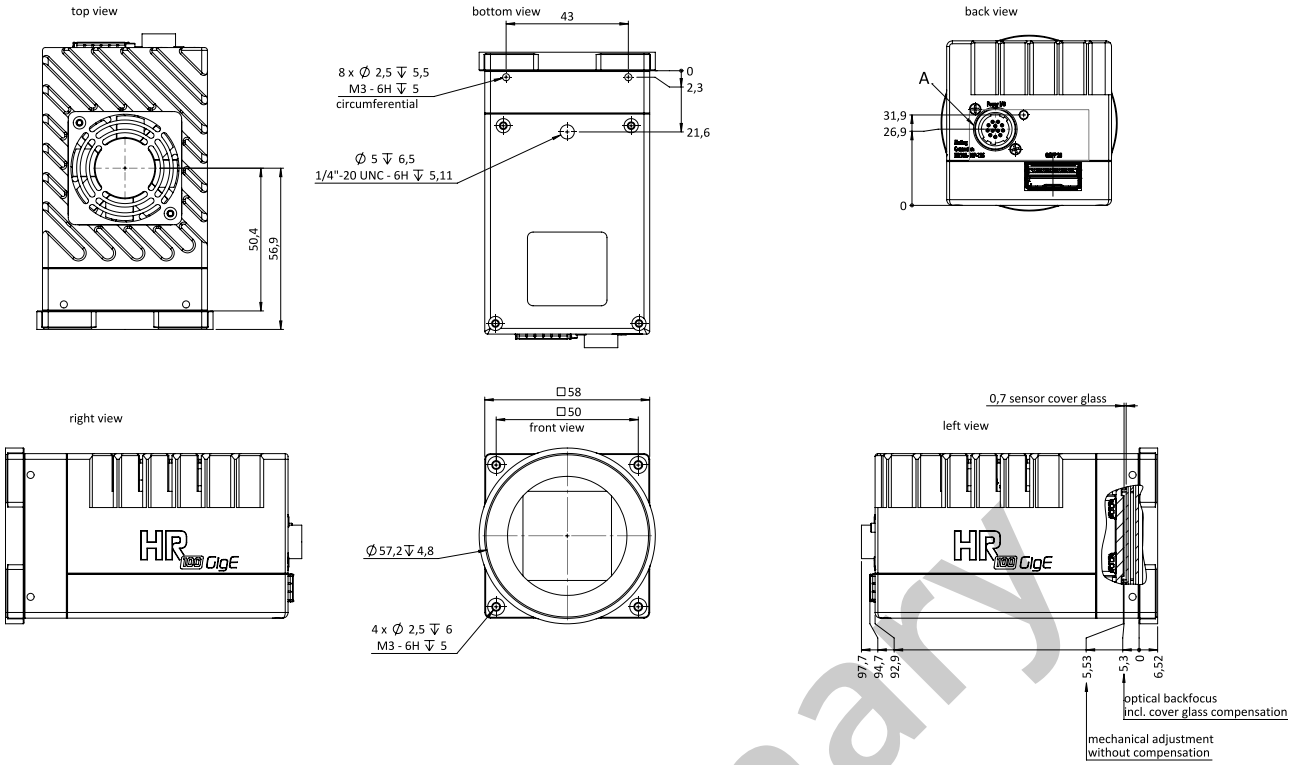

I/O pin assignment

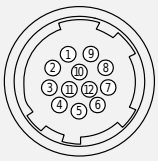

1	VIn- (GND)
2	VIn+ (24 V DC)
3	In 4 (RxD RS232)
4	Out 4 (TxD RS232)
5	In 1 (0 ... 24 V)
6	In 2 (0 ... 24 V)
7	Out 1 (open drain)
8	Out 2 (open drain)
9	In 3+(opto In+)
10	In 3-(opto In-)
11	Out 3 (open drain)
12	Out 0 (open drain)

preliminary