# FXO CoaXPress

fxo531CCX12-2C



| □□ | |
|---|---|
| □□ | fxo531CCX12-2C |
| □□ □□ | F002258 |
| □□ □□□ | FXO CoaXPress |
| □□ | Available |

| □□ | |
|---|---|
| □□ □□ | Area scan |
| □□□ | Color |
| □□□□ | Visible |
| □□□□ □□ | 400 nm to 1000 nm |
| □□□ | 4,512 × 4,512 (20.40 MP) |
| □□ □□ | Sony IMX531 |
| □□ □□□□ (□□) | cmos |
| □□ □□ | Global shutter (GS) |
| □□ □□ | 12.36 × 12.36 mm (17.48 mm, Type 1.1) |
| □□ □□ | 2.74 µm × 2.74 µm |

| □□ □□ | |
|---|---|
| □□ □□ □□ | 12-bit, 8-bit |
| RGB □□ □□ | bayer12, bayer8 |

| □□□ □□ | |
|---|---|
| □□□□ □□□ | 72 dB |
| SNR | 39 dB |

## □□□ □ □□

| | |
|---|---|
| □□ □□□ □□ | 109.5 fps |
| □□ □□ | 21 µs to 60 s |
| □□ | 0.0 dB to 48.0 dB |

## I/O □ □□

| | |
|---|---|
| □□□ □□ | 0 x LVDS input, 0 x LVDS output, 0 x TTL input, 0 x TTL output, 2 x 24V input, 4 x Open drain output, |
| □□ □□□ □□ | 1 x RS232 input, 1 x RS232 output, 0 x RS422 input, 0 x RS422 output, |
| □□□ □□ | 1 x Optical isolated input, 0 x Optical isolated input, |
| I/O □□□ | 12-pin Hirose HR10A-10P-12S |
| □□ □□ □□ | 10 to 25VDC, Power over CoaXPress |
| □□ □□ | External: 14 W (typical) |

## □□ □□

| | |
|---|---|
| □□ □□ | -10 °C to 60 °C (□□□) |
| Humidity | 10 % to 90 % (non-condensing) |

## □□□ □□

| | |
|---|---|
| □□ □□ (L x W x H mm) | 73 × 50 × 50 |
| □□/□□ □□ | IR-Cut - 680nm |
| IP □□ | IP30 |
| □□ □□□ | C-Mount |
| □□ | 240 g |

## □□□ □□□ □ FPGA

| | |
|---|---|
| □□□□ □□□ (□□□) | 32 MByte |

## □□□□□

| | |
|---|---|
| □□□ □□□□□ | cxp-12 with 2 connections |
| □□□□□ □□□ | (micro-BNC) |
| □□ □□ | CoaXPress 2.0 |

## FW □□ - □□□ □□

| | |
|---|---|
| □□ □□ | auto, external, manual |

## FW □□ - □□□ □□

| | |
|---|---|
| □□ □□ | auto, manual |
| □□□ □□□ □□ | auto, manual |
| □□□ □□ □□ | lut, mirror-image, roi |

## FW □□ - □□□ □□

| | |
|---|---|
| □□□ □□/□□□ | external, internal, software |

## Quantum Efficiency

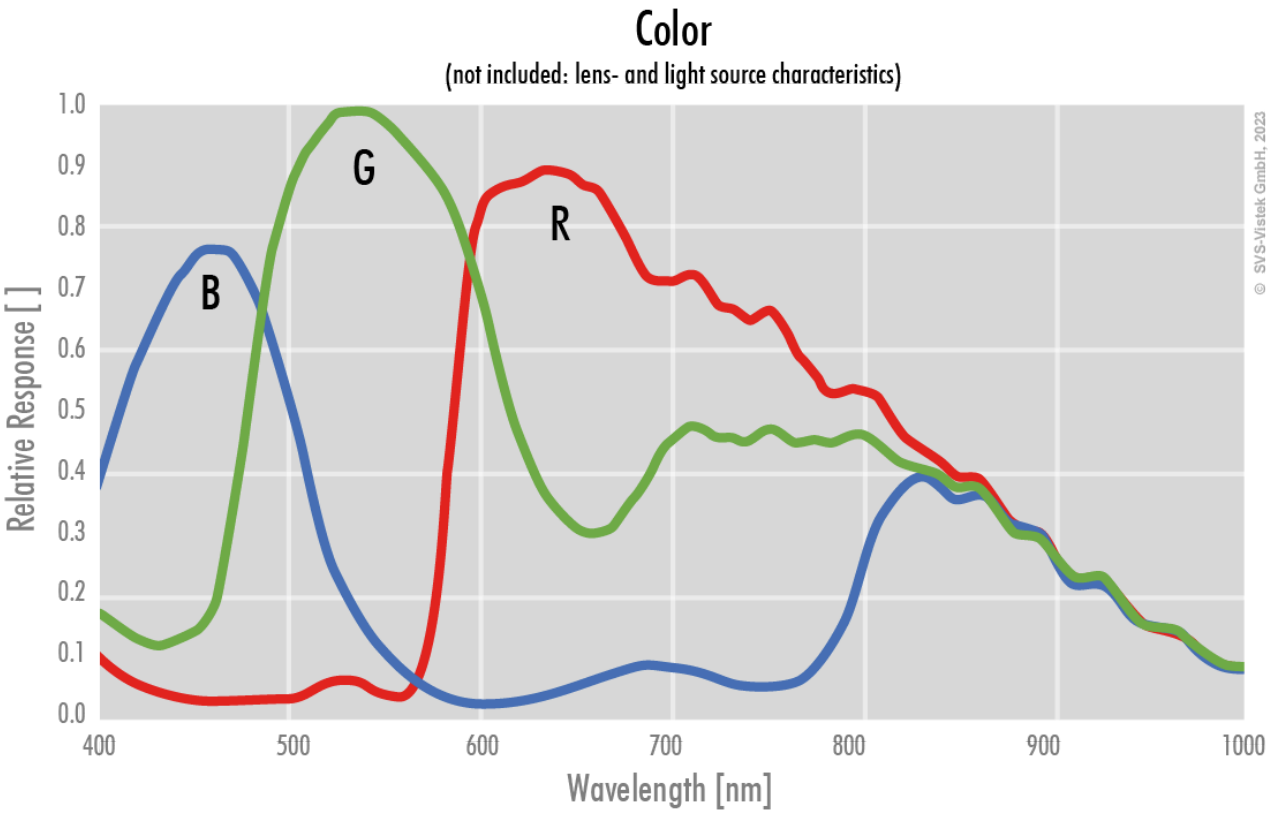

# Technical Drawing

back view

front view

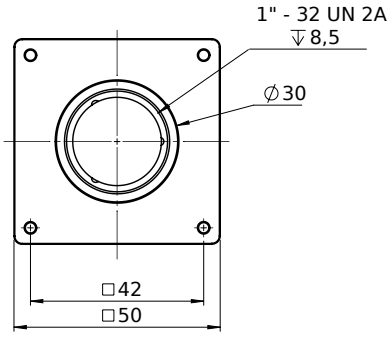


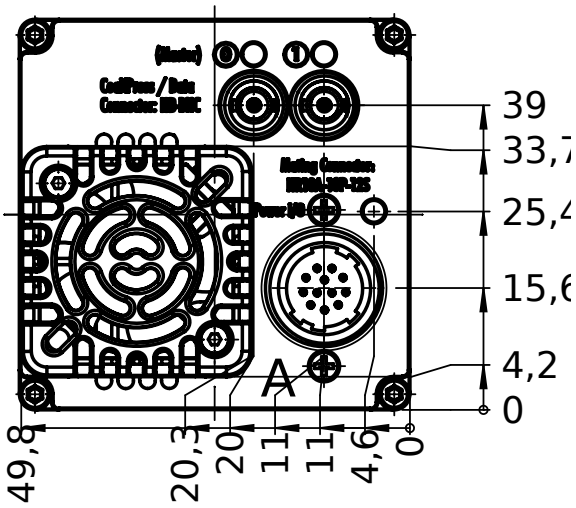


left view

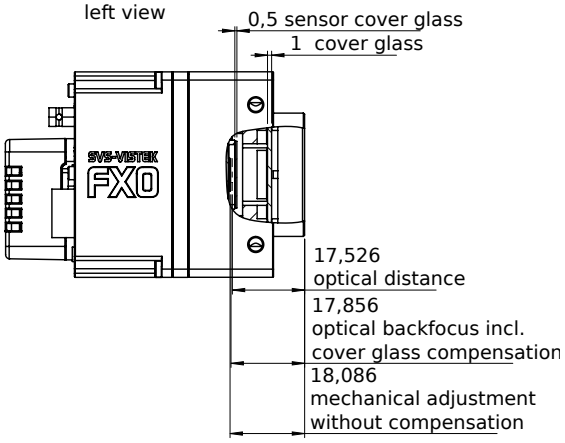


right view

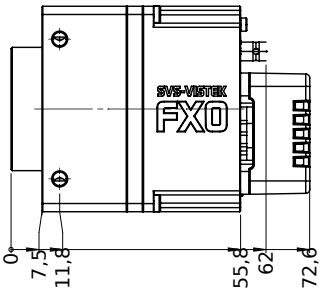


top view

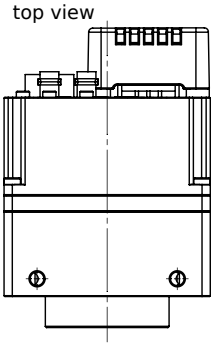

bottom view

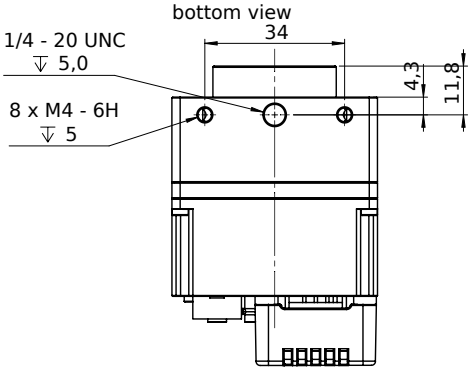

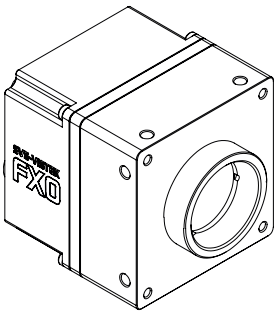

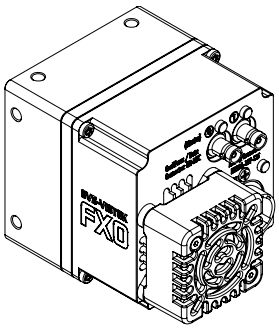

## I/O pin assignment

Hirose 12 Pin

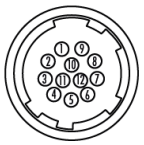

| | | | | | |
|---|---|---|---|---|---|
| 1 | VIN – | (GND) | 7 | OUT 1 | (open drain) |
| 2 | VIN + | (10 V to 25 V DC) | 8 | OUT 2 | (open drain) |
| 3 | IN 4 | (RXD RS232) | 9 | IN 3 + | (opto In + ) |
| 4 | OUT 4 | (TXD RS232) | 10 | IN 3 – | (opto In –) |
| 5 | IN 1 | (0 - 24V) | 11 | OUT 3 | (open drain) |
| 6 | IN 2 | (0 - 24V) | 12 | OUT 0 | (open drain) |